# NP Automatic

# END DOOR OPERATORS

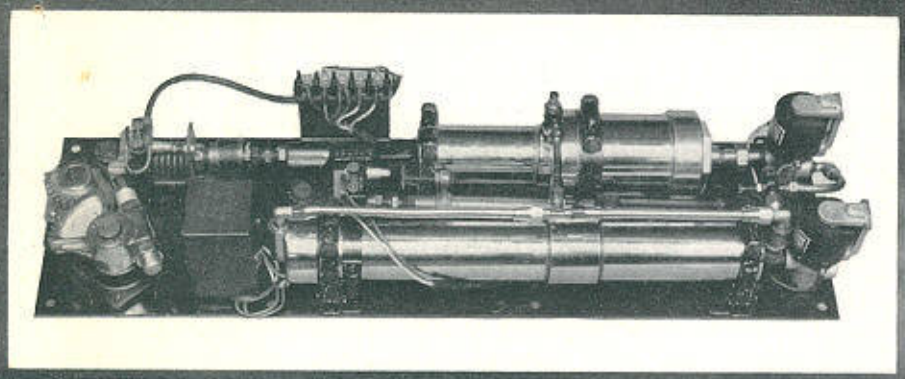


The ***modern***
power door operator for
railway passenger coaches

# ELIMINATES PASSENGER EFFORT . . . INCREA

THE N.P. Automatic End Door Operators make a stroll through the entire length of a train as easy as walking from room to room in your home. Progress from car to car is effortless and a pleasure. There are no obstacles to free passenger movement — no stubborn end doors to dispute passage or ruffle tempers. The doors open at a touch — and close automatically.

Completely safe, the N.P. Automatic End Door Operator re-opens the door if it is obstructed while closing. When the obstruction is removed, the door automatically closes and the action of the door is cushioned to prevent slamming.

Here is a convenience that every passenger appreciates. Built for either swinging or sliding door N.P. Automatic End Door Operators are being installed by leading railroads as rapidly as possible. In fact, there are approximately 3485 N.P. Automatic End Door Operators in service or on order as of May 1, 1950.

## DESCRIPTION OF EQUIPMENT (Swing Door)

The door operating equipment is mounted on a base plate, ready for installation in the compartment over the door. This equipment consists of the End Door Operator Engine, Pressure and Exhaust type Magnet Valves, a Time Delay Relay, a Door Reversing Switch, a Door Reversing Cut-Out Switch, and an Emergency Door Closing Cylinder.

The door is attached to two short shafts, one at the top and one at the bottom. The bottom shaft is pivoted in a bearing and it merely guides the door. The top shaft, by which the door is hung, extends into the compartment above the door. The End Door Operator Engine is connected to the top door shaft through gear segments and the movement of the engine piston rotates the door shaft through an arc of about 90° to open and close the door.

A Micro Switch which initiates the opening movement of the door is located in the door lock and actuated by the movement of the door handle or push bar.

A three position Porter's Door Switch permits setting the door (1) to operate automatically, (2) to remain open (3) to be operated manually.

## SETTING UP THE DOOR FOR AUTOMATIC OPERATION

With the switch on the car switch panel closed and the porter's door switch in the "Automatic" position, a circuit is completed to the coil of the pressure type magnet valve, which then valves air pressure to and through the exhaust type magnet valve into the end port of the operator engine, to the center port of the operator engine and to the emergency door closing cylinder, making the equipment operative. The door is closed and the piston of the emergency door closing cylinder is held outward where it does not affect the automatic operation of the door.

# HERE'S HOW IT OPERATES

Red — indicates air pressure  Yellow — indicates exhausting air

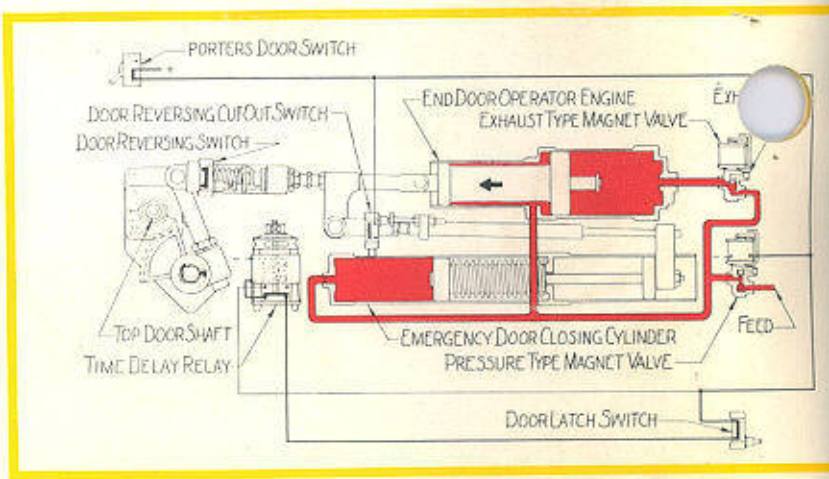


### Figure 1 — DOOR LATCH ACTUATED

The switch of the time delay relay is a double pole, double throw toggle switch, which is normally in the position shown in figure 1. When the door handle or push bar is actuated to withdraw the latch, the micro switch in the door lock momentarily completes a circuit to the coil of the time delay relay across its lower set of contacts. The toggle switch of the relay then opens its lower contacts and closes its upper contacts, as shown in figure 2.

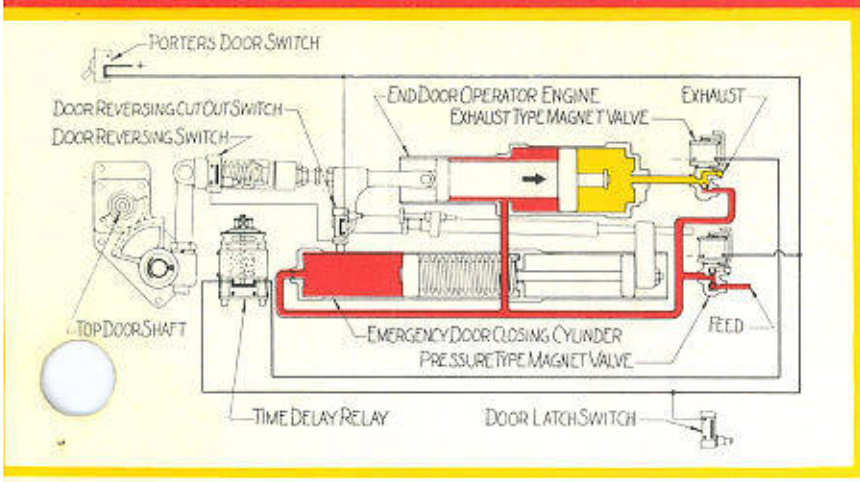


## Figure 2 — DOOR OPENING

With the time delay relay contacts in the position shown in figure 2, the circuit to the relay coil has been opened and a circuit is completed across the upper set of relay contacts to the coil of the exhaust type magnet valve. The time delay starts when the relay coil is de-energized, and it is usually set to hold the exhaust type magnet valve energized for about four seconds. While the exhaust type magnet valve is energized, it exhausts the air pressure from the end port of the end door operator engine and the pressure entering the center port moves the operator piston inward in the door opening direction.

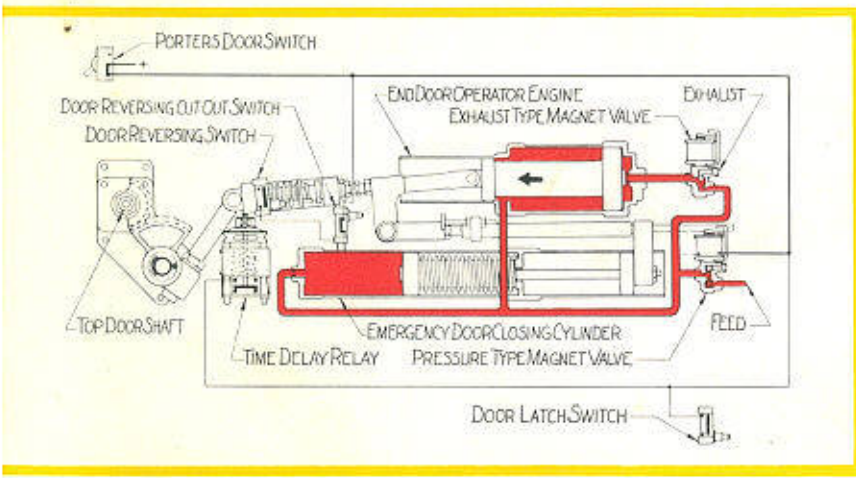


## Figure 3 — DOOR CLOSING

When the door reaches the fully open position and at the expiration of the time at which the time delay relay is set, the relay de-energizes the exhaust type magnet valve and the door closes.

## Figure 4 — DOOR CLOSED

Air pressure valved into the end port of the end door operator engine by the exhaust type magnet valve moves the engine piston completely out to the door closed position.

The door reversing cut-out switch opens the circuit to the door reversing switch when the door enters the door jam, which cuts out the reversing feature. The full power of the end door operator engine is then available to completely and positively close the door.

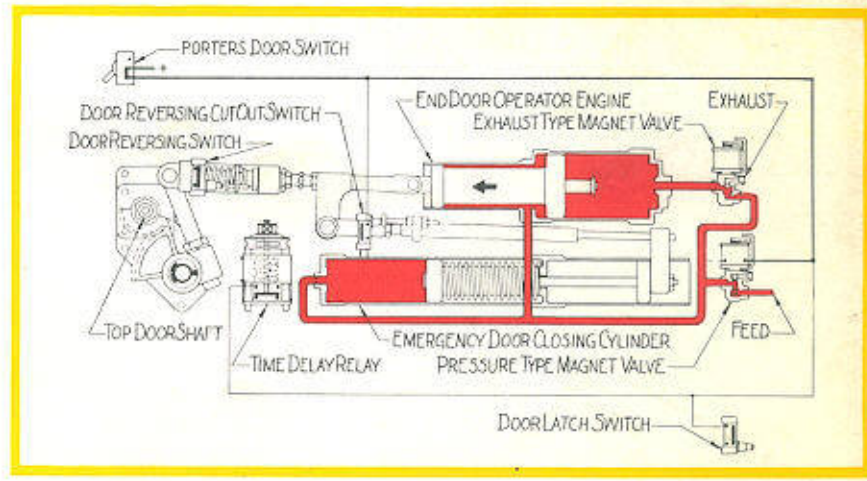


## Figure 5 — DOOR REVERSES

If the door is obstructed while closing, the end door operator engine builds up a pressure of 12 to 15 pounds at the door against the obstruction, which compresses a spring in the operator connecting rod and momentarily closes the door reversing switch. The door reversing switch momentarily completes a circuit to the coil of the time delay relay across its lower set of contacts, causing the toggle switch of the relay to open its lower contacts and close its upper contacts, completing a circuit to the exhaust type magnet valve. The door then re-opens and the sequence shown by figures 2, 3 and 4 is repeated.

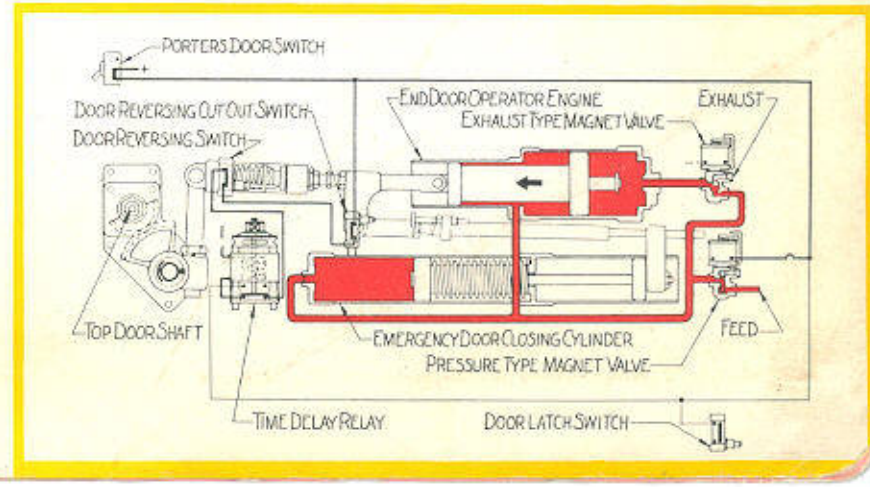

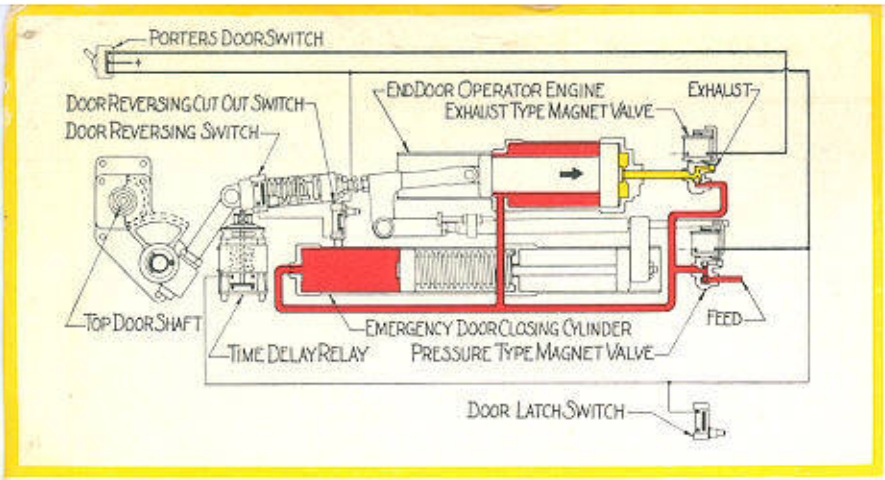


## Figure 6 — SETTING THE DOOR TO REMAIN OPEN

By setting the Porter's Door Switch in the "remain open" position, the exhaust type magnet valve is energized, which exhausts air pressure from the end port of the end door operator engine, opening the door. The exhaust type magnet valve remains energized and the door remains open until the setting of the porter's door switch is changed.

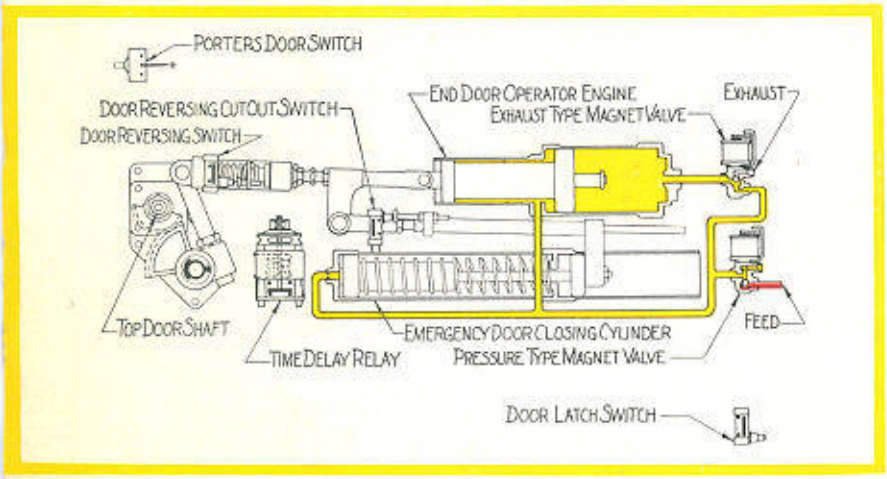


## Figure 7 — MANUAL OPERATION

Placing the porter's door switch in the "manual" position, de-energizes the coil of the pressure type magnet valve, which then shuts off air pressure to the door operating equipment and exhausts the pressure from it. The spring in the emergency door closing cylinder then moves its piston inward, pushing the crosshead of the emergency door closing cylinder against the shoulder of the connecting rod and moving the piston of the end door operator engine to the door closed position. In order to open the door, it is then necessary to push it against the pressure of the spring in the emergency door closing cylinder. When the door is released, the spring in the cylinder closes the door. The action under this condition is similar to that of the ordinary door check.

## OPERATION WITHOUT ELECTRIC POWER

If a failure of electric power occurs, the coil of the pressure type magnet valve is de-energized and the operation of the door is the same as when the porter's door switch is placed in the "manual" position.

## OPERATION WITHOUT AIR PRESSURE

In the event of a failure of air pressure, the piston in the emergency door closing cylinder moves to the door closed position and the operation of the door is the same as when the porter's door switch is placed in the "manual" position.

## SLIDING DOORS

The N.P. Automatic End Door Operating equipment for sliding doors is comparable in every respect with the equipment for operating swinging doors. It incorporates the same basic advantages of effortless opening, automatic closing, and automatic reversal of the closing door if it is obstructed.

THE National Pneumatic Company originated power door operating equipment for mass transportation and it has specialized in the design and production of this type of equipment since 1904.

Originally installed on elevated railway cars, the advantages of N.P. power door operation soon resulted in its adoption for street cars, subway cars, buses and trolley buses. National Pneumatic door operating and control equipment is generally regarded as standard by the transit industry, and thousands of transit vehicles throughout the world are equipped with National Pneumatic Door Control.

The N.P. Automatic End Door Operators are the result of about fifteen years of experimentation and research in close collaboration with some of the foremost American railroads. These devices have been tried and proved in actual service and the list of railroads that have specified them for their new cars, is ample testimony as to their effectiveness in helping to increase passenger revenue by increasing passenger comfort.

**NATIONAL PNEUMATIC CO., INC.**
New York • 125 Amory Street, Boston 19, Mass. • Chicago

Publication 1063-B

PRINTED IN U.S.A.
THE PRINTMARK CO., NEW YORK

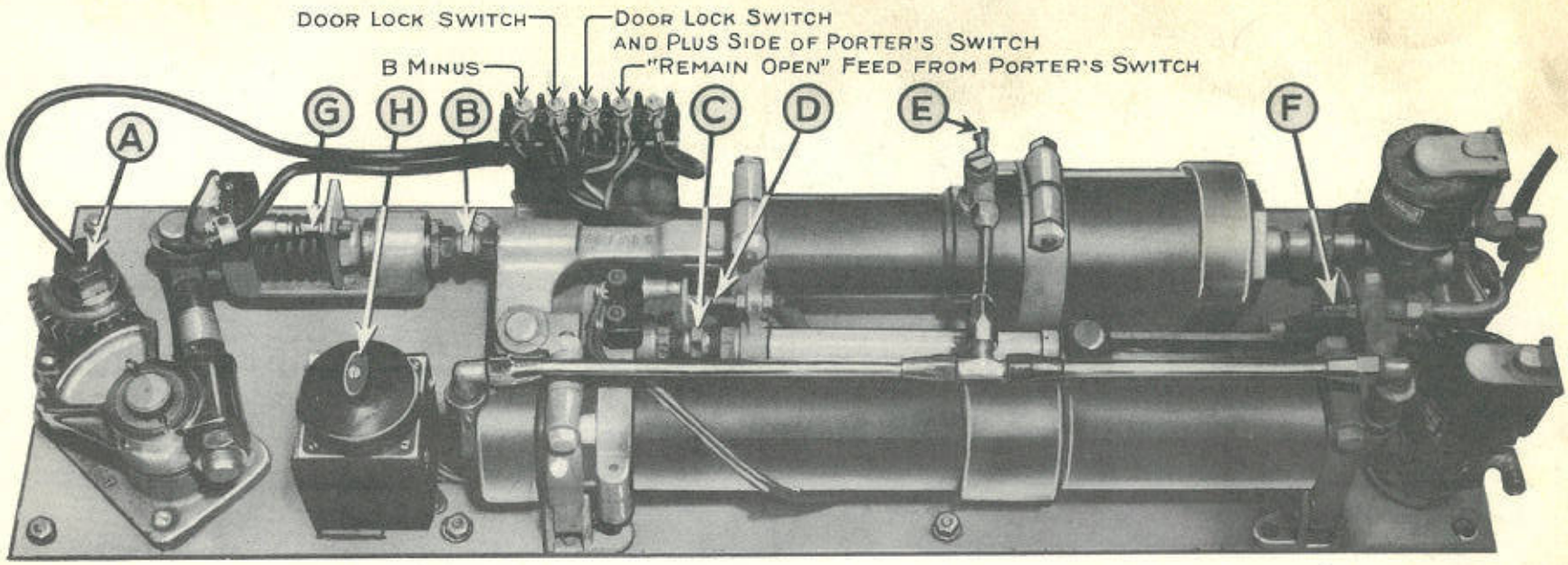


*NOTE:—Door Locks are not furnished by the National Pneumatic Co., Inc. Instructions covering adjustment of locks should be obtained from the lock manufacturer.*

# Adjustment Instructions

## A Door Shaft Nuts

The two jam nuts at the top of the top door shaft must be adjusted to raise or lower the door until there is adequate clearance at both the top and bottom of the door, after which the jam nuts must be pulled tight to maintain the adjustment.

## B Operator Connecting Rods

Before making adjustment "B", back striker "D" as far from micro switch as possible. With air on and porter's door switch in automatic position, adjust operator connecting rod with turnbuckle "B" so the nut on the operator piston is flush with the end of the cylinder as shown in figure 1. Then re-adjust striker in accordance with instruction "D".

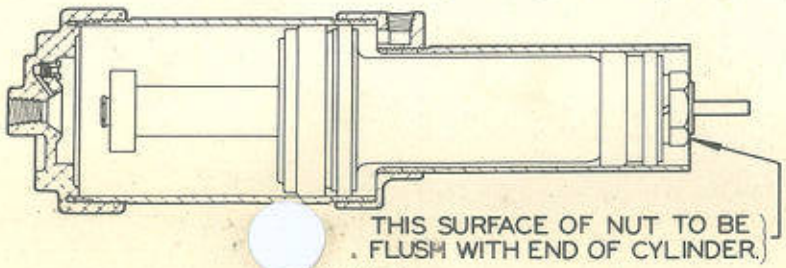


FIGURE 1

## C Emergency Door Closing Cylinder Connecting Rod

Before making adjustment "C", back striker "D" as far from micro switch as possible. With air on and porter's door switch in the "remain open" position, adjust turnbuckle "C" so the clevis pin just touches the end of the clevis slot. Then shorten the connecting rod by 1½ turns of turnbuckle "C". Re-adjust striker in accordance with instruction "D".

## D Door Reversing Cut-Out Switch

With air on and porter's door switch in the "automatic" position, screw striker "D" toward the micro switch until the switch plunger is compressed about ⅛". Then open the door, hold a pencil or small screw driver blade across the inside frame of the door opening as shown in figure 2, and permit the door to close against this object. Back striker "D" slowly away from the micro switch until the door reverses from this position.

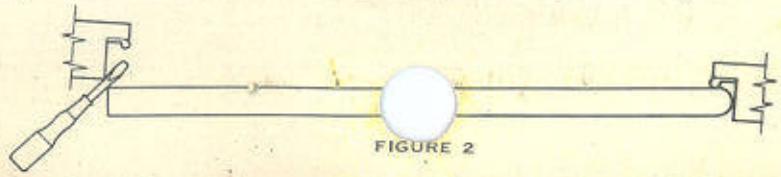

FIGURE 2

★As the adjustment of the Door Opening and Door Closing Control Fittings is interdependent, the door opening fitting should always be adjusted before attempting to adjust the door closing fitting. When combined governors and pressure regulators are in the air feed line to the end door operators, adjustments can be made at any train line pressure exceeding the pressure at which the regulator is set. When combined governors and pressure regulators are not in the air feed line, all adjustments must be made at the service train line pressure.

## E Door Opening Control Fitting ★

With the door closed and latched, place the porter's door switch in the "remain open" position. After about five seconds, release the door latch. If the door has a tendency to slam open, loosen the jam nut and turn the adjusting screw into the door opening control fitting. If the door opens too slowly, back the adjusting screw out of the fitting until the proper speed is obtained. Then lock the adjusting screw in position with the jam nuts. The recommended door opening speed is 3 to 3½ seconds.

## F Door Closing Control Fitting ★

Place the porter's door switch in the "remain open" position. Allow the door to remain open for about five seconds, and then quickly place the porter's switch in the "automatic" position. If the door has a tendency to slam closed, loosen the jam nut and turn the adjusting screw into the door closing fitting. If the door closes too slowly, back the adjusting screw out of the fitting until the proper speed is obtained. Then lock the adjusting screw in position with the jam nut. The minimum recommended door closing speed is 4 seconds.

## G Door Reversing Switch Striker

Adjust the switch striker so that with the door in the closed position, and the porter's door switch in the "manual" position, there is 1/16" clearance between the switch striker and the micro switch plunger.

## H Time Delay Relay

Rotate the adjusting screw clockwise to increase the delay and counterclockwise to decrease the delay. The usual setting is four to five seconds from the time the latch is actuated until the door starts to close.

**NATIONAL PNEUMATIC CO., INC.**

New York 125 Amory St., Boston 19, Mass. Chicago

PRINTED IN U.S.A.
THE PRINTMARK CO.,—NEW YORK

Publication 1065-A

# Automatic End Door Operator

## Adjustment Check List

**If** door binds at top or bottom, follow instructions under adjustment "A".

**If,** with the porter's door switch in "manual" position, the door does not close completely, check the door latch, the door seals and the door for binding. If these are in good order, follow instructions under adjustment "C".

**If,** with the porter's door switch in "automatic" position, the door reverses at the door jam, check the latch for sticking or interference and check the weather seals and door for binding. If these are in good order, follow instructions under adjustment "D".

**If,** with the porter's door switch in "automatic" position, the door does not open promptly when latch is actuated, check position of latch and keeper and make adjustments in accordance with lock instructions, which can be obtained from the lock manufacturer.

**If** door opens too quickly or too slowly, follow instructions under adjustment "E".

**If** door closes too quickly or too slowly, follow instructions under adjustment "F".

**If** door reverses without coming against an obstruction, check the door for binding. If door is free, follow instructions under adjustment "G". This condition can also be caused by the door closing too quickly which can be corrected by following instructions under adjustment "F".

**If** obstructed door fails to reverse, follow instructions under adjustment "D" and "G".

**If** timing of the door from release of latch to start of closing is incorrect, follow instructions under adjustment "H".

**Mechanical Adjustments A-B-C**
**Air Adjustments E-F**
**Electrical Adjustments D-G-H**

# NATIONAL PNEUMATIC CO., INC.

**125 Amory Street, Boston 19, Massachusetts**

New York, Graybar Bldg. Chicago, McCormick Bldg.

Manufactured in Canada by RAILWAY AND POWER ENGINEERING CORP., LTD.


**DOOR CONTROL AND SAFETY EQUIPMENT FOR MASS TRANSPORTATION**

# MAGNET VALVES

## (Pressure-Type)

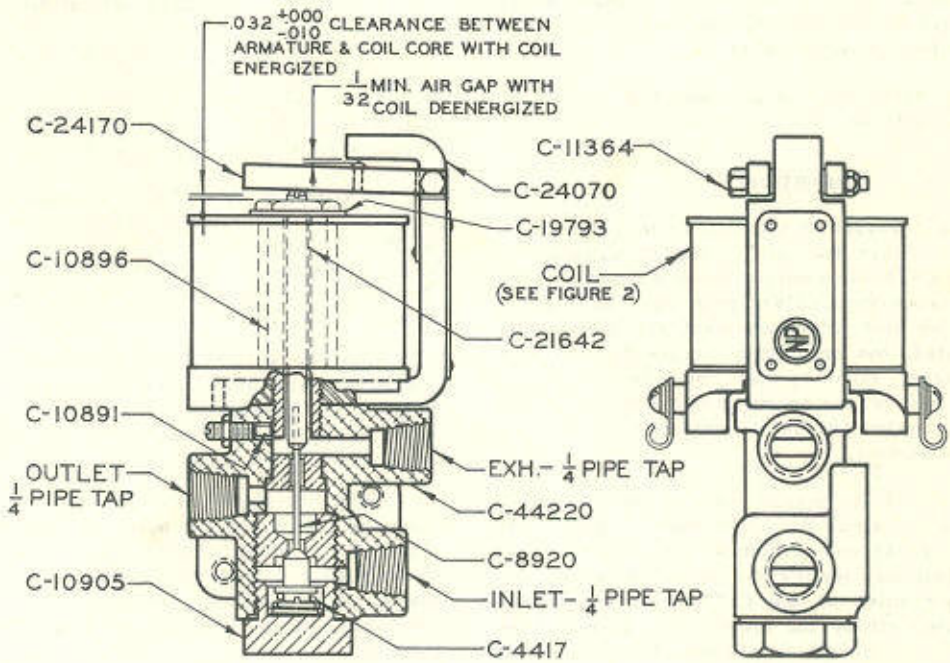


FIGURE 1

| VOLTAGE | COIL NUMBER | MAGNET VALVE COMPLETE WITHOUT BRACKET |
|---|---|---|
| 6 | C-17390 | C-44430 |
| 12 | C-15540 | C-26120 |
| 24 | C-41430 | C-44440 |
| 32 | C-16630 | C-43720 |
| 55-75 | C-31670 | C-43730 |
| 120 | C-41950 | C-43670 |

FIGURE 2

### PART LIST

Part Numbers of Magnet Valves are identical with the exception of the coils. For part numbers of Coils, and numbers of complete magnet valves without brackets, (See Fig. 2).

C-4417 Spring
C-8920 Valve & Stem
C-10891 Plug
C-10896 Coil Core
C-10905 Cap Nut
C-11364 Pivot Screw
C-21642 Push Rod
C-24070 Bracket & Spring
C-24170 Armature Lever
C-44220 Valve Body & Seats

# MAGNET VALVES
## (Pressure-Type)

### General Description

Pressure-type Magnet Valves admit compressed air to another connected unit of equipment when the magnet valve coil is energized; when this coil is de-energized, air pressure is sealed off and the connected equipment unit is free to exhaust to atmosphere.

The magnet valve should be mounted as near the operated unit as possible to avoid an operating time-lag. Installation, in an upright position, must be made where there is no danger of freezing any condensation that may adhere to the valves or valve seats.

The magnet valves are compact and light in weight, and all working parts are non-corrosive.

### Operation

Constant air pressure is supplied to the inlet port, shown in Fig. 1. When the coil is energized, magnetic force draws the C-24170 armature lever downward. This movement depresses the C-21642 push rod and seats it in the upper valve seat. Simultaneously, the lower valve C-8920 is unseated, thus permitting air pressure to pass through the magnet valve to the connected equipment unit. While the coil of the magnet valve remains energized, the magnet valve admits air pressure to the connected unit of equipment.

When the coil of the magnet valve is de-energized, the spring C-4417 returns the lower valve C-8920 with the push rod C-21642 and armature lever C-24170 to their upward positions, seating the lower valve and unseating the upper valve on the C-21642 push rod. Air pressure is sealed off by the lower valve at this time and the connected equipment unit is free to exhaust past the unseated upper valve to atmosphere.

The magnet valve can be operated by hand by depressing the armature lever C-24170.

### Adjustment and Maintenance

The magnet valve should remain air tight for a long period. Occasionally, after lengthy service, harsh foreign substances present in the compressed air system may enter the magnet valve and injure the valve faces sufficiently to cause a slight leak. If this occurs, regrind the valves.

Detach the magnet valve before any work is performed on it. First, exhaust the air system or shut off the air. Then disconnect the air lines and remove the wires from the magnet valve terminals.

### Valve Grinding

To grind the lower valve remove cap nut C-10905, spring C-4417, and valve C-8920. Then apply a small quantity of grinding compound to the face of the C-8920 valve. Replace it in the magnet valve and rotate it with a screw driver until the valve face is smooth.

To grind the upper valve, remove the armature lever C-24170 and push rod C-21642. Apply a small quantity of the grinding compound to the valve face of the push rod C-21642 and replace it in the magnet valve. Rotate the push rod with a screw driver until all scores disappear from the valve face.

After the valves have been ground, the valve faces should be thoroughly washed in gasoline and all air passages in the magnet valve should be blown out with compressed air to make certain that no particles of grinding compound remain in the magnet valve.

When the magnet valve has been re-assembled, make sure that the top of the push rod C-21642 projects .032" plus .000" or minus .010" from the face of the coil core. If the push rod projects less than .022", it should be replaced with a new one. A gauge C-14022, to check this clearance, can be obtained from the National Pneumatic Co., Inc.

The magnet valve may be tested for leakage with an air pressure gauge, or by applying soap and water solution to the ports. With the magnet valve coil energized, or with the armature lever depressed manually, no indication of pressure should be obtained at the outlet connection. With the magnet valve coil de-energized, no pressure should be obtained at the exhaust connection.

Magnet valves require no lubrication.

### SHIPPING DATA

| | Weight | | Gross Packaged Weight (One Unit) | | | Cubical Contents of Package Containing One | |
|---|---|---|---|---|---|---|---|
| | Pounds | Kilos | Domestic Shipment Pounds | Foreign Shipment Pounds | Foreign Shipment Kilos | Cubic Inches | Cubic Centimeters |
| Magnet Valve (Pressure Type)... | 2½ | 1.3 | 3 | 6 | 2.7 | 192 | 3146 |

PRINTED IN U.S.A.
THE PRINTMARK CO.—NEW YORK

# NATIONAL PNEUMATIC CO., INC.

**125 Amory Street, Boston 19, Massachusetts**

New York, Graybar Bldg. Chicago, McCormick Bldg.

Manufactured in Canada by RAILWAY AND POWER ENGINEERING CORP., LTD.


**DOOR CONTROL AND SAFETY EQUIPMENT FOR MASS TRANSPORTATION**

# C-41000 END DOOR OPERATOR ENGINE

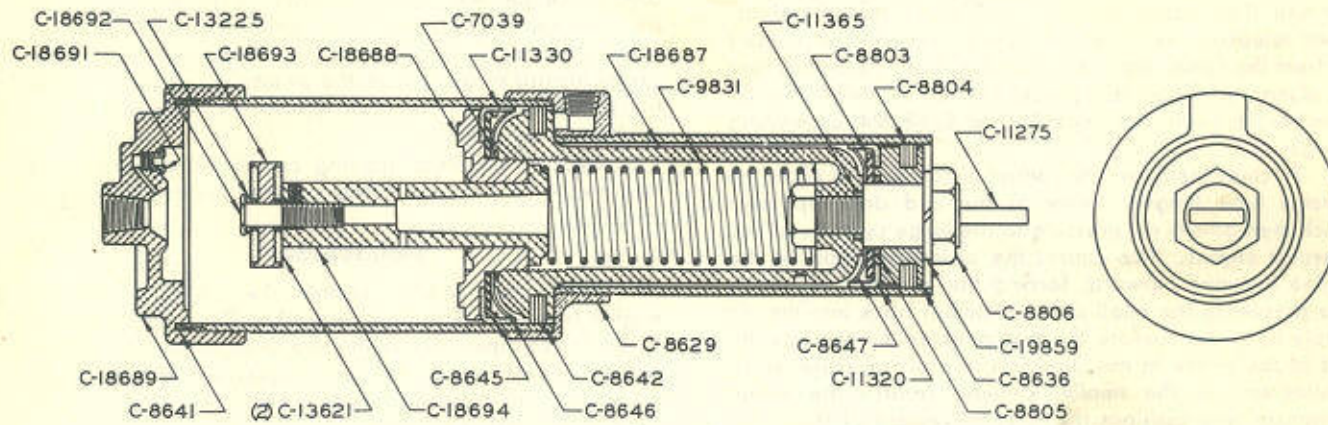


Figure 1

**C-41000 End Door Operator Engine**

PART LIST

| | | | | | |
|---|---|---|---|---|---|
| C-7039 | Gasket | C-8804 | Felt Lubricating Ring | C-13621 | Cushion Seal |
| C-8629 | Cylinder | C-8805 | Gasket | C-18687 | Piston |
| C-8636 | Piston Center | C-8806 | Lock Nut | C-18688 | Follower |
| C-8641 | Gasket | C-9831 | Plunger Spring | C-18689 | Cylinder Cap |
| C-8642 | Felt Lubricating Ring | C-11275 | Stud | C-18691 | Cushion Plug |
| C-8645 | Cup Follower | C-11320 | Cup | C-18692 | Screw |
| C-8646 | Cup Expander | C-11330 | Cup | C-18693 | Seal Retainer |
| C-8647 | Cup Expander | C-11365 | Gasket | C-18694 | Cushioning Plunger |
| C-8803 | Cup Washer | C-13225 | Bushing | C-19859 | Washer |

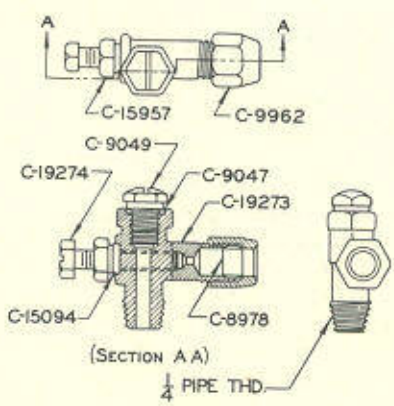


Figure 2

**C-43640 Speed Control Fitting**

PART LIST

| | | | |
|---|---|---|---|
| C-8978 | Thimble | C-15094 | Gasket |
| C-9047 | Gasket | C-15957 | Nut |
| C-9049 | Screw | C-19273 | Body |
| C-9962 | Coupling | C-19274 | Screw |

## General Description

The C-41000 differential-type Operator Engine is the main power unit of the N.P. Automatic End Door Operator for swinging doors. It is equipped with the built-in N.P. cushioning device which insures smooth door operation in both the opening and closing movements.

## Operation

The piston assembly of the C-41000 Operator Engine has two different diameters, and fits into piston chambers of corresponding size. As the pistons have different areas, when air pressure is present in both chambers the piston with the larger area exerts the greater force and overcomes the lesser opposing force of the smaller piston. Therefore, the piston assembly moves outward, closing the door.

When the control circuit energizes the exhaust-type Magnet Valve of the End Door Operator, this magnet valve exhausts the air pressure from the larger cylinder of the Operator Engine. With the larger cylinder open to exhaust, the constant pressure entering the engine at the center port moves the piston assembly inward, thus opening the door.

To prevent the door from slamming open, a cushioning device is incorporated in the engine. As the door opens, the piston moves rapidly inward until the C-13621 seal on the end of the C-18694 cushioning plunger contacts the end of the large cylinder and closes the free exhaust port. The remainder of the air pressure in the cylinder is then exhausted through a small orifice in the cushioning plug. As the piston continues its stroke, an "air cushion" is built up which retards the engine speed and cushions the final movement of the door.

The end door operator engine incorporates a constant-speed feature. If the door is obstructed or held while opening, air continues exhausting from the large cylinder of the engine. To replenish the air leaving the large cylinder and thus maintain an air cushion so that the door, when released, will open at normal speed, compressed air from the center port of the engine flows constantly into the plunger assembly and passes out into the large cylinder chamber through openings in the C-18694 cushioning plunger.

To close the door, the control circuit de-energizes the exhaust type Magnet Valve of the end door operator which then admits air pressure to the large cylinder of the operator engine. This causes the piston assembly in the engine to move outward, forcing the constant line pressure present in the small piston chamber back into the air supply line. Just before the piston assembly reaches the end of the stroke in this direction, the air pressure which "builds up" in the smaller cylinder retards the piston movement and cushions the final movement of the door.

## Adjustment

The C-41000 Operator Engine is provided with two C-43640 speed control fittings to regulate the opening and closing movement of the door. As the adjustments are interdependent, the adjustment of the door-opening control fittings should be made before attempting to adjust the door-closing control fitting. All adjustments should be made at 100 pounds pressure.

To regulate the opening speed of the door, proceed as follows: With the door completely closed and latched, place the porter's door switch in the "remain open" position. After about five seconds, release the door latch. If the door has a tendency to slam open, loosen the jam nut and turn the adjusting screw into the door-opening speed control fitting. If the door opens too slowly, back the adjusting screw out of the control fitting until the proper speed is obtained. Then lock the adjusting screw in position with the jam nut to maintain this adjustment.

To regulate the closing speed of the door, proceed as follows: Place the porter's door switch in the "remain open" position. Allow the door to remain open for about five seconds, and then quickly place the porter's switch in the "automatic" position. If the door has a tendency to slam closed, loosen the jam nut and turn the adjusting screw into the door-closing speed control fitting. If the door closes too slowly, back the adjusting screw out of the control fitting until the proper speed is obtained. Then lock the adjusting screw in position with the jam nut to maintain this adjustment.

## Lubrication

The two felt lubricating rings in the piston of the C-41000 Operator Engine should be saturated with SAE-30 lubricating oil at least once every six months. First, turn off the main switch in the car to remove air pressure from the operator engine. The C-8804 felt lubricating ring, located at the end of the piston in the small cylinder, is accessible for oiling when the piston is fully extended, as in door-closed position. Apply the lubricant with an oil can through the four slots in the C-8636 piston center. To saturate the C-8642 felt lubricating ring in the larger piston, remove the C-9049 screw from the C-43640 door-opening speed control fitting at the center port of the engine and apply one ounce (or two tablespoonsful) of the oil. If the oil does not flow readily into the engine, disconnect the connecting rod from the engine and move the piston assembly slowly inward so as to draw the oil into the engine. Rotate the piston assembly one-half turn to insure complete saturation of the felt rings.

Replace the door-opening control fitting screw and turn on the air pressure. Then operate the engine several strokes.

## Maintenance

About once a year, remove the C-41000 operator engine from the base plate of the End Door Operator unit in the compartment above the end door so that the engine can be disassembled, cleaned, inspected and lubricated. To remove the operator engine from the base plate, turn off the air supply and disconnect the union which joins the air line between the port on the large cylinder end cap and the exhaust-type Magnet Valve. Then disconnect the air line leading to the C-43640 door-opening control fitting at the center port of the operator engine.

Disconnect the main connecting rod between the door shaft and the engine. Remove the two bolts from the C-11388 and C-11391 clamps holding the operator engine fastened to the base plate.

To disassemble the operator engine, place it in a bench vise and remove the C-18689 end cap. Take out the entire piston assembly to examine the piston cups and lubricating rings. The C-11320 piston cup can be removed by unscrewing the C-8806 lock nut. The C-11330 piston cup can be removed by unscrewing the C-18688 follower. Replace piston cups with new ones, if necessary.

Inspect the C-8804 and C-8642 felt lubricating rings and replace them, if necessary.

Clean all metal parts in gasoline and apply fresh C-18987 grease to the C-11320 and C-11330 piston cups and to the cylinder walls. Then saturate the two felt lubricating rings with SAE-30 lubricating oil.

Before re-assembling the operator engine, replace the C-7039, C-8805, C-8641 and C-11365 gaskets, if necessary. Then install the re-assembled engine on the base plate and clamp it firmly in position. Attach the main connecting rod and connect the air line piping to the center port door-opening control fitting C-43640. To complete the installation, connect the piping between the C-18689 cylinder end cap and the exhaust-type Magnet Valve.

## SHIPPING DATA

| | Weight | | Gross Packaged Weight (One Unit) | | | Cubical Contents of Package Containing One | |
|---|---|---|---|---|---|---|---|
| | | | Domestic Shipment | Foreign Shipment | | | |
| | Pounds | Kilos | Pounds | Pounds | Kilos | Cubic Inches | Cubic Centimeters |
| C-41000 Engine | 8 ½ | 3.9 | 9 | 14 | 6.4 | 830 | 13600 |

PRINTED IN U.S.A.
THE PRINTMARK CO.,—NEW YORK

# NATIONAL PNEUMATIC CO., INC.

**125 Amory Street, Boston 19, Massachusetts**

New York, Graybar Bldg. Chicago, McCormick Bldg.

Manufactured in Canada by RAILWAY AND POWER ENGINEERING CORP., LTD.


**DOOR CONTROL AND SAFETY EQUIPMENT FOR MASS TRANSPORTATION**

# MAGNET VALVES

## (Heavy Duty Exhaust Type)

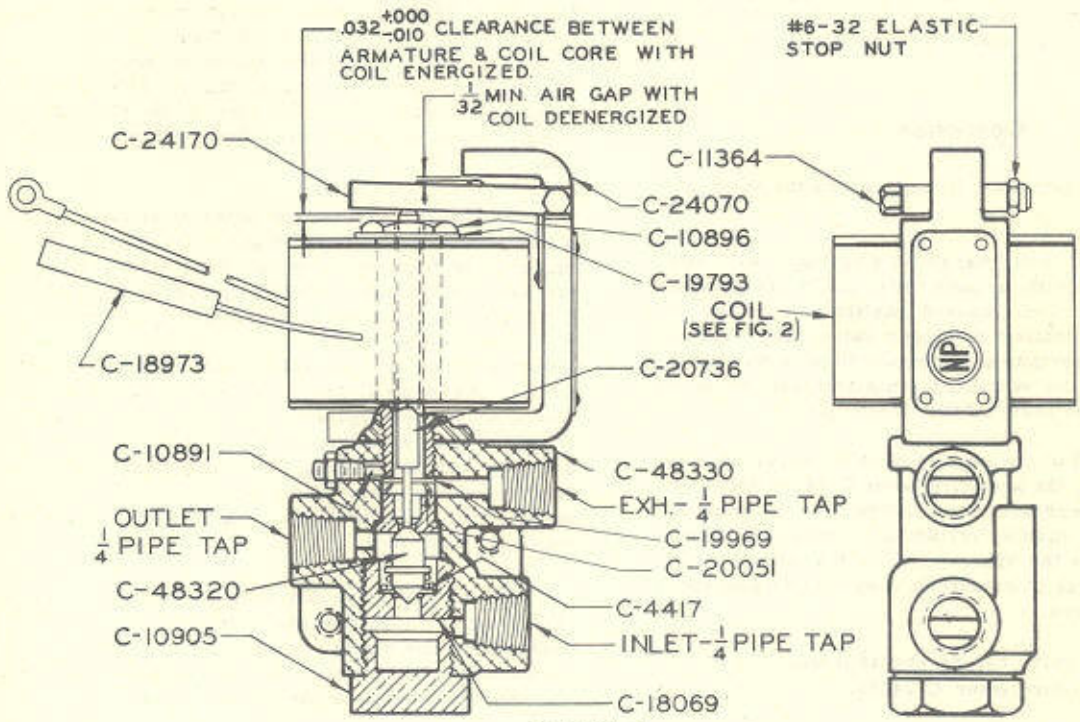


FIGURE 1

## PART LIST

Part Numbers of Magnet Valves are identical with the exception of the coils. For part numbers of Coils, and numbers of complete magnet valves without brackets, See Fig. 2.

| | | | |
|---|---|---|---|
| C-4417 | Spring | C-19969 | Disc (Silencer) |
| C-10891 | Plug | C-20051 | Spring (Silencer Disc) |
| C-10896 | Coil Core | C-20736 | Push Rod |
| C-10905 | Cap Nut | C-24070 | Bracket & Spring |
| C-11364 | Pivot Screw | C-24170 | Armature Lever |
| C-18069 | Valve Seat | C-48320 | Valve |
| C-18973 | Sleeve | C-48330 | Body |
| C-19793 | Spring Washer | Coil -- | See Figure 2 |

| VOLTAGE | COIL NUMBER | MAGNET VALVE COMPLETE WITHOUT BRACKET |
|---|---|---|
| 32 | C-48340 | C-48370 |
| 64 | C-48350 | C-48380 |
| 120 | C-48360 | C-48390 |

FIGURE 2

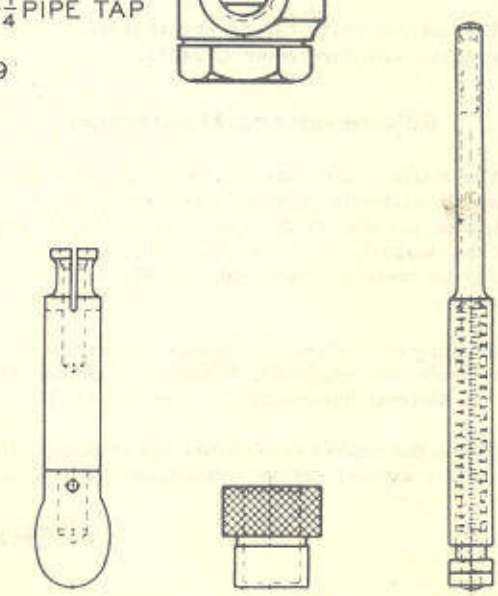

C-21290 C-13622 C-21300

VALVE GRINDING TOOLS

# MAGNET VALVES

## (Heavy Duty Exhaust Type)

### General Description

Exhaust-Type Magnet Valves exhaust compressed air from another connected unit of equipment when the magnet valve coil is energized; when this coil is de-energized, the magnet valve permits air pressure to pass through it continuously to the other unit of equipment.

To avoid an operating time-lag, the magnet valve should be mounted as near the operated unit of equipment as possible. Installation, in an upright position, must be made where there is no danger of freezing any condensation that may adhere to the valves or valve seats. Install the magnet valve so that any condensation will drain from it.

### Operation

Constant air pressure is supplied to the inlet port, shown in Fig. 1.

When the coil is de-energized, a spring C-4417 holds the valve C-48320 with the push rod C-20736 and armature lever C-24170 in their upward positions, unseating the lower valve and seating the upper valve. The unseated lower valve now permits air pressure to pass through the magnet valve to the connected equipment unit, while the seated upper valve seals off the exhaust port.

When the coil of the magnet valve is energized, magnetic force draws the armature lever C-24170 downward. This movement depresses the C-20736 push rod and seats the lower valve, shutting off the air supply, and simultaneously unseats the upper valve, so the connected unit of equipment is free to exhaust through the unseated upper valve to atmosphere.

The magnet valve can be operated manually by depressing the armature lever C-24170.

### Adjustment and Maintenance

The magnet valve should remain air tight for a long period. Occasionally, after lengthy service, harsh foreign substances present in the compressed air system may enter the magnet valve and injure the valve faces sufficiently to cause a slight leak. If this occurs, regrind the valves.

Grinding the valves is a simple operation when the proper tools are employed. These tools can be obtained from the National Pneumatic Co., Inc. (See other side)

Detach the magnet valve before any work is performed on it. First exhaust the air system, or shut off the air. Then disconnect the air lines and remove the wires from the magnet valve terminals. The magnet valve can now be easily removed by taking out the attaching screws.

### Valve Grinding

Use valve holder C-21300 for grinding the lower valve. Unscrew cap nut C-10905 and the lower valve seat C-18069 from the magnet valve body C-48330 and remove the armature lever C-24170 and push rod C-20736. Apply a small quantity of grinding compound to the lower face of the valve C-48320 and replace it in the magnet valve housing, together with the spring C-4417 and lower valve seat C-18069. The C-21300 valve holder is then placed in the hole in the center of the coil so that the slotted end of the valve holder will fit over the stem of the C-48320 valve. Rotate the valve holder and valve until the valve face is smooth.

The tool for grinding the upper valve face consists of a valve holder C-21290 and a guide C-13622. To grind the upper valve face, unscrew cap nut C-10905 and remove the lower valve seat C-18069, spring C-4417, and valve C-48320 from the magnet valve housing. The lower end of the valve C-48320 is then placed in the end of the valve holder C-21290 and the valve holder is pushed part way through the guide C-13622. A small quantity of grinding compound is now applied to the upper face of the valve C-48320. The valve holder guide, with the valve holder and valve, is then placed in the bottom of the magnet valve. The end of the valve holder which projects through the magnet valve is rotated until all scores disappear from the upper valve face.

After either valve has been ground, the valve faces should be thoroughly washed with gasoline and all air passages in the magnet valve should be blown out with compressed air to make certain that no particles of grinding compound remain in the magnet valve.

After re-assembling the magnet valve, make sure that the top of the push rod C-20736 projects .032" plus .000" or minus .010" from the face of the coil core, when the coil is energized. If the push rod projects less than .022" it should be replaced.

The magnet valve may be tested for leakage with an air pressure gauge, or by applying soap and water solution to the ports. With the magnet valve energized, or with the armature lever depressed manually, no indication of pressure should be obtained at the outlet connection. With the valve de-energized, no pressure should be obtained at the exhaust connection.

Magnet valves require no lubrication.

## SHIPPING DATA

| | Weight | | Gross Packaged Weight (One Unit) | | | Cubical Contents of Package Containing One | |
|---|---|---|---|---|---|---|---|
| | Pounds | Kilos | Domestic Shipment Pounds | Foreign Shipment Pounds | Foreign Shipment Kilos | Cubic Inches | Cubic Centimeters |
| Magnet Valve (Exhaust-Type).... | 2½ | 1.3 | 3 | 6 | 2.7 | 192 | 3146 |

PRINTED IN U.S.A.
THE PRINTMARK CO.,—NEW YORK

# NATIONAL PNEUMATIC CO., INC.

**125 Amory Street, Boston 19, Massachusetts**

New York, Graybar Bldg. Chicago, McCormick Bldg.

Manufactured in Canada by RAILWAY AND POWER ENGINEERING CORP., LTD.


**DOOR CONTROL AND SAFETY EQUIPMENT FOR MASS TRANSPORTATION**

# EMERGENCY DOOR-CLOSING CYLINDERS

## C-41920 R.H. and C-41690 L.H.

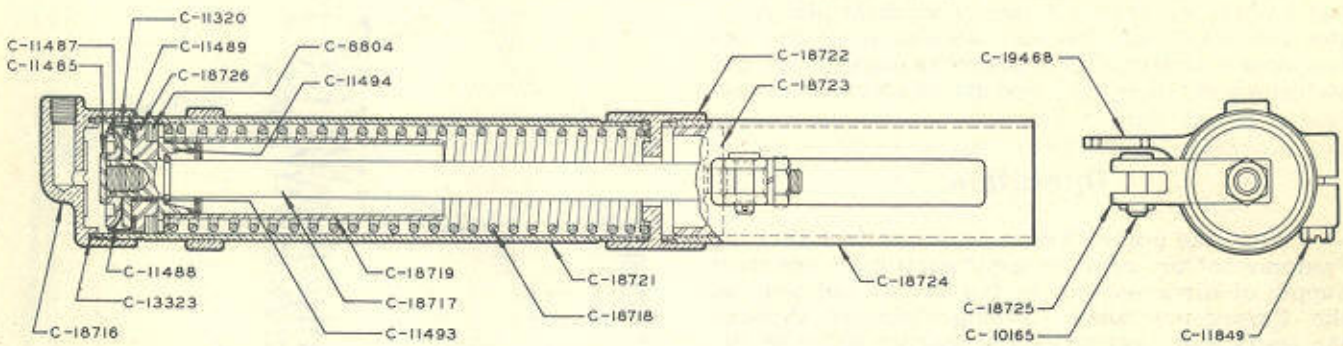


Figure 1

C-41920 EMERGENCY DOOR-CLOSING CYLINDER (Right Hand)

Left-hand Emergency Door-Closing Cylinder (C-41690) is identical, except slot in rear cylinder is on opposite side.

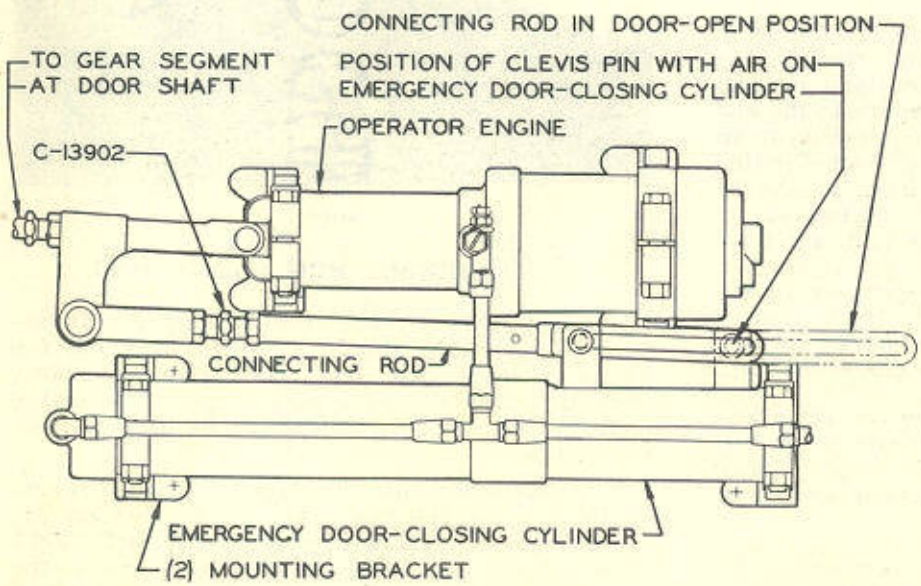


Figure 2

Emergency Door-Closing Cylinder shown with air off and door closed.

PART LIST

| | |
|---|---|
| C-8804 | Lubricating Strip |
| C-10165 | Pin for Jaw |
| C-11320 | Cup Assembly |
| C-11485 | Lock Screw |
| C-11487 | Follower Washer |
| C-11488 | Expander |
| C-11489 | Washer |
| C-11493 | Plunger Gasket |
| C-11494 | Lubricator Retainer |
| C-11849 | Screw |
| C-13323 | Gasket |
| C-18716 | Cap |
| C-18717 | Plunger (Rod) |
| C-18718 | Spring |
| C-18719 | Spring Guide |
| C-18721 | Cylinder |
| C-18722 | Coupling |
| C-18723 | Cup Guide |
| C-18724 | Rear Cylinder |
| C-18725 | Connecting Rod Jaw |
| C-18726 | Piston Center |
| C-19468 | Bracket for Micro-switch |

# EMERGENCY DOOR-CLOSING CYLINDERS

## C-41920 R.H. and C-41690 L.H.

### General Description

The Emergency Door-Closing Cylinder is an auxiliary unit of the N. P. Automatic End Door Operator (Swing Door Type) and is installed on the base plate which mounts the operator engine. The C-41920 Emergency Door-Closing Cylinder (Shown in Fig. 1) is used on a right-hand end door operator, and the C-41690 Emergency Door-Closing Cylinder is used on a left-hand end door operator.

The Emergency Door-Closing Cylinder functions when the porter's door switch is placed in the "manual" position, and also in the event the end door operator engine becomes inoperative due to failure of either air pressure or electric power.

### Operation

When the porter's door switch is in either the "automatic" or "remain open" position, a constant supply of air pressure is fed to the end port of the Emergency Door-Closing Cylinder through the energized pressure-type magnet valve of the operator unit. This air pressure moves the piston outward, compressing the C-18718 spring in the Emergency Door-Closing Cylinder. The connecting rod jaw C-18725 which is attached to the C-18717 piston rod, moves to the outer end of the slot in the connecting rod (with the door closed), as shown by full lines, in Fig. 2. It remains there, where it has no effect upon the operation of the door until the air pressure is shut off.

When the porter's door switch is placed in the "manual" position, the control circuit de-energizes the coil of the pressure-type magnet valve which then shuts off air pressure to the end door operator unit and exhausts the pressure from it. The spring in the Emergency Door-Closing Cylinder then moves its piston inward, moving its piston rod and attached connecting rod jaw to the inner end of the clevis slot (with the door closed). In order to open the door, it is then necessary to push it against the pressure of the spring in the Emergency Door-Closing Cylinder. When the door is released, the spring in the Emergency Door-Closing Cylinder closes the door.

If failure of electric power occurs, the pressure-type magnet valve coil is de-energized and the action of the Emergency Door-Closing Cylinder is the same as when the porter's door switch is placed in the "manual" position.

In the event of failure of air pressure, the spring in the Emergency Door-Closing Cylinder moves its piston inward to the door-closed position and the operation of the door is the same as when the porter's door switch is placed in the "manual" position.

### Adjustment

With the door closed and the porter's door switch in the "manual" position--as shown in Fig. 2--adjust turnbuckle C-13902 so the clevis pin bears firmly against the end of the clevis slot. After this adjustment is obtained, the connecting rod must not be shortened more than one additional full turn of the C-13902 turnbuckle.

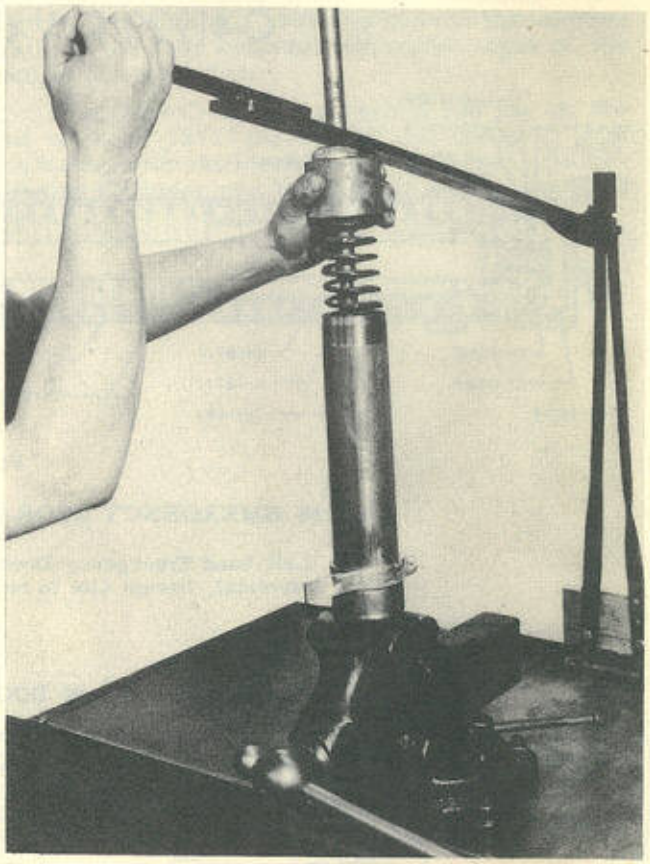

Figure 3

### Maintenance and Lubrication

Every three years, the Emergency Door-Closing Cylinder should be disassembled for cleaning, inspection, and lubrication. For this periodic service, the Emergency Door-Closing Cylinder must be removed from the base plate in the compartment above the end door.

To remove the Emergency Door-Closing Cylinder from the base plate, first shut off the air supply and disconnect the piping to the C-18716 cylinder end cap. Remove the bolts from the mounting brackets holding the Emergency Door-Closing Cylinder in position on the base plate. Then take the C-10165 pin out of the C-18725 jaw. The Emergency Door-Closing Cylinder can now be removed from the base plate for disassembling.

CAUTION: The C-18718 spring in the Emergency Door-Closing Cylinder exerts a pressure of about 90 pounds against the C-18722 coupling. Therefore, before attempting to dismantle the Emergency Door-Closing Cylinder, it is absolutely necessary to be equipped with a spring-releasing device like the one shown in Figures 3 and 4, or serious personal injury may result. If desired, the entire Emergency Door-Closing Cylinder can be returned to the National Pneumatic Co., Inc., Boston, Mass. and be replaced under their convenient Rebuilt-Exchange Plan.

To disassemble the Emergency Door-Closing Cylinder, place it in a bench vise in a vertical position, held by the C-18716 cylinder cap port projection. Remove the nut and washer from the end of the C-18717 piston rod and detach the connecting rod jaw C-18725. Using a 3-inch spanner wrench, unscrew the C-18724 slotted rear cylinder from the C-18722 coupling, holding the coupling with a strap wrench to prevent it from turning. Then lift the C-18723 cup guide from the end of the C-18717 piston rod.

The C-18722 coupling should now be unscrewed from the C-18721 main cylinder. Before doing this, however, screw a 12-inch extension rod (see Fig. 4) to the threaded end of the C-18717 piston rod to serve as a guide for the C-18718 spring as it is being released from the C-18721 cylinder. Then place the spacer--shown in Fig. 4--over the extension rod and on top of the inner flange of the C-18722 coupling. Place the slotted section of the spring-releasing lever over the extension rod and against the top of the spacer (See Fig. 4). Using a strap wrench, start unscrewing the C-18722 coupling from the C-18721 main cylinder--which must be held with another strap wrench to prevent it from turning in the C-18716 cylinder end cap. When the coupling is almost fully unscrewed from the cylinder, be sure to hold the slotted spring-releasing lever firmly against the spacer so as to release the spring slowly.

With the coupling off, unscrew the C-18721 main cylinder from the C-18716 end cap which is still held in the vise. Then remove the C-18718 spring, the C-18717 piston rod and piston assembly from the cylinder. NOTE: To insure correct reassembly, mark the end of the C-18721 main cylinder which was attached to the C-18716 end cap.

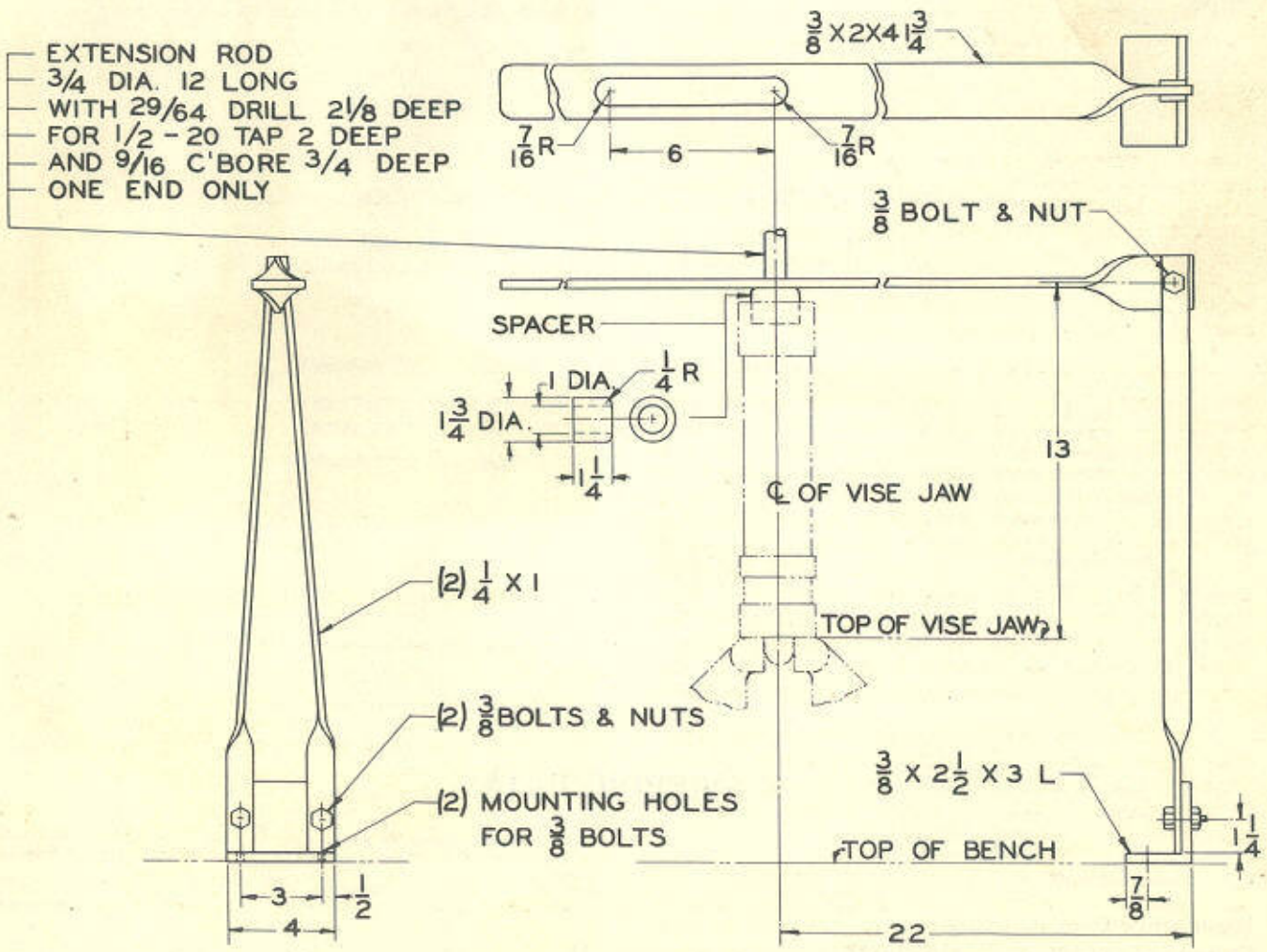


Figure 4

Examine the piston cup and felt lubricating strip and renew them, if necessary. To remove the C-11320 piston cup, unscrew the C-11485 lock screw and C-11487 follower washer and remove the C-11488 expander and C-11489 washer.

Clean all metal parts in gasoline and apply fresh C-18987 grease to the C-11320 piston cup, the C-18718 spring, and to the interior walls of the C-18721 main cylinder. Then saturate the C-8804 lubricating strip with SAE-30 lubricating oil. Re-assemble the piston assembly as shown in Fig. 1.

The Emergency Door-Closing Cylinder can now be re-assembled. Insert the C-18717 piston rod and piston assembly through the end of the main cylinder which was previously marked for correct attachment to the C-18716 end cap. Replace the C-13323 gasket in the C-18716 end cap. Then place the C-18716 end cap port projection in the vise and screw the main cylinder into the end cap and tighten. Again screw the extension rod to the end of the C-18717 piston rod (See Fig. 4) and drop the C-18718 spring into the cylinder. Then place the C-18722 coupling over the piston rod extension, with the recessed end of the coupling against the end of the spring. Now place the slotted section of the spring-releasing lever over the piston rod extension and press the lever down on top of the spacer against the pressure of the spring until the threads of the C-18722 coupling and the C-18721 cylinder make contact. Screw the coupling to the cylinder and tighten with a strap wrench. Then remove the spacer and extension rod and place the C-18723 cup guide on the piston rod, as shown in Fig. 1.

Now screw the C-18724 rear cylinder into the C-18722 coupling, using a spanner wrench. Make certain that when tightened, the slotted side of the rear cylinder is exactly at right angles to the end cap port and on the correct side. Then apply a thin film of C-18987 grease to the interior walls of the rear cylinder and to the edges of the slot in this cylinder.

Place the C-18725 connecting rod jaw on the end of the C-18717 piston rod and fasten it with the lockwasher and lock nut. The Emergency Door-Closing Cylinder can now be attached to the base plate.

## SHIPPING DATA

| | Weight | | Gross Packaged Weight (One Unit) | | | Containing One Cubical Contents of Package | |
|---|---|---|---|---|---|---|---|
| | Pounds | Kilos | Domestic Shipment Pounds | Foreign Shipment Pounds | Foreign Shipment Kilos | Cubic Inches | Cubic Centimeters |
| Emergency Door-Closing Cylinder C-41920 or C-41690 | 13½ | 6.1 | 18 | 18 | 8.4 | 400 | 6,555 |

PRINTED IN U.S.A.
THE PRINTMARK CO. —NEW YORK

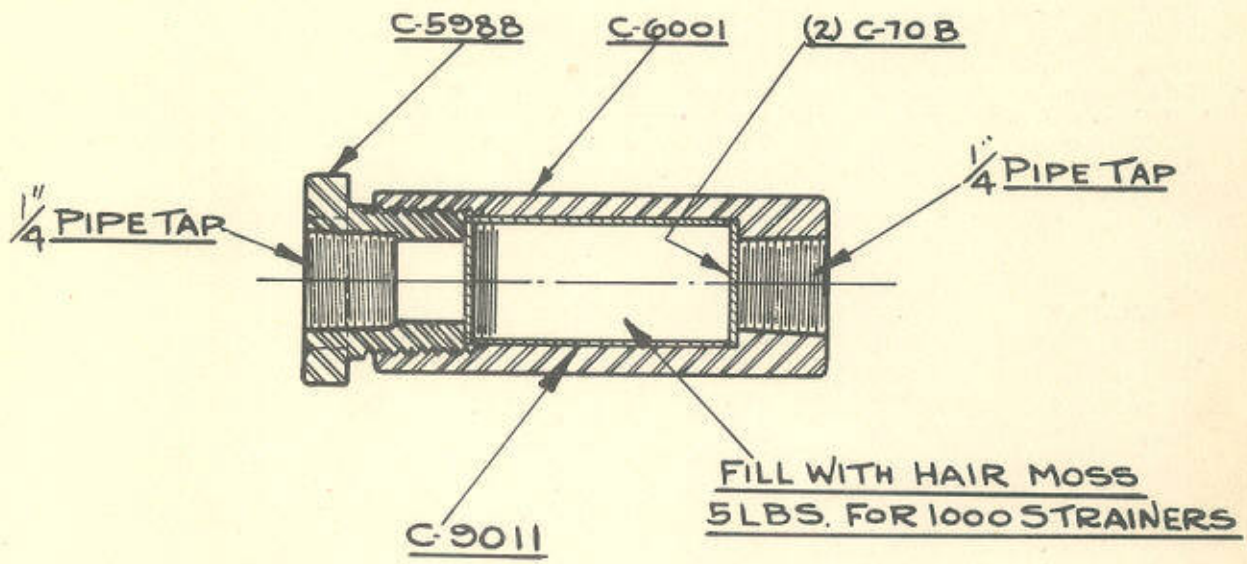


WGT. 6 1/8 oz
REPAIR #6251
ASSEMBLY

| | | |
|---|---|---|
| | | |
| | | |
| | | |
| | | |
| "C" | NEW. DWG. | 1-12 33 |
| | CHANGES | |

| | | | |
|---|---|---|---|
| NAME: STRAINER | DATE: 9-18-13 | SCALE: 12"-1'-0" | MATERIAL |
| NATIONAL PNEUMATIC CO., INC. BOSTON, MASS. | CHECKED BY: P.S.L. | | C-70 |

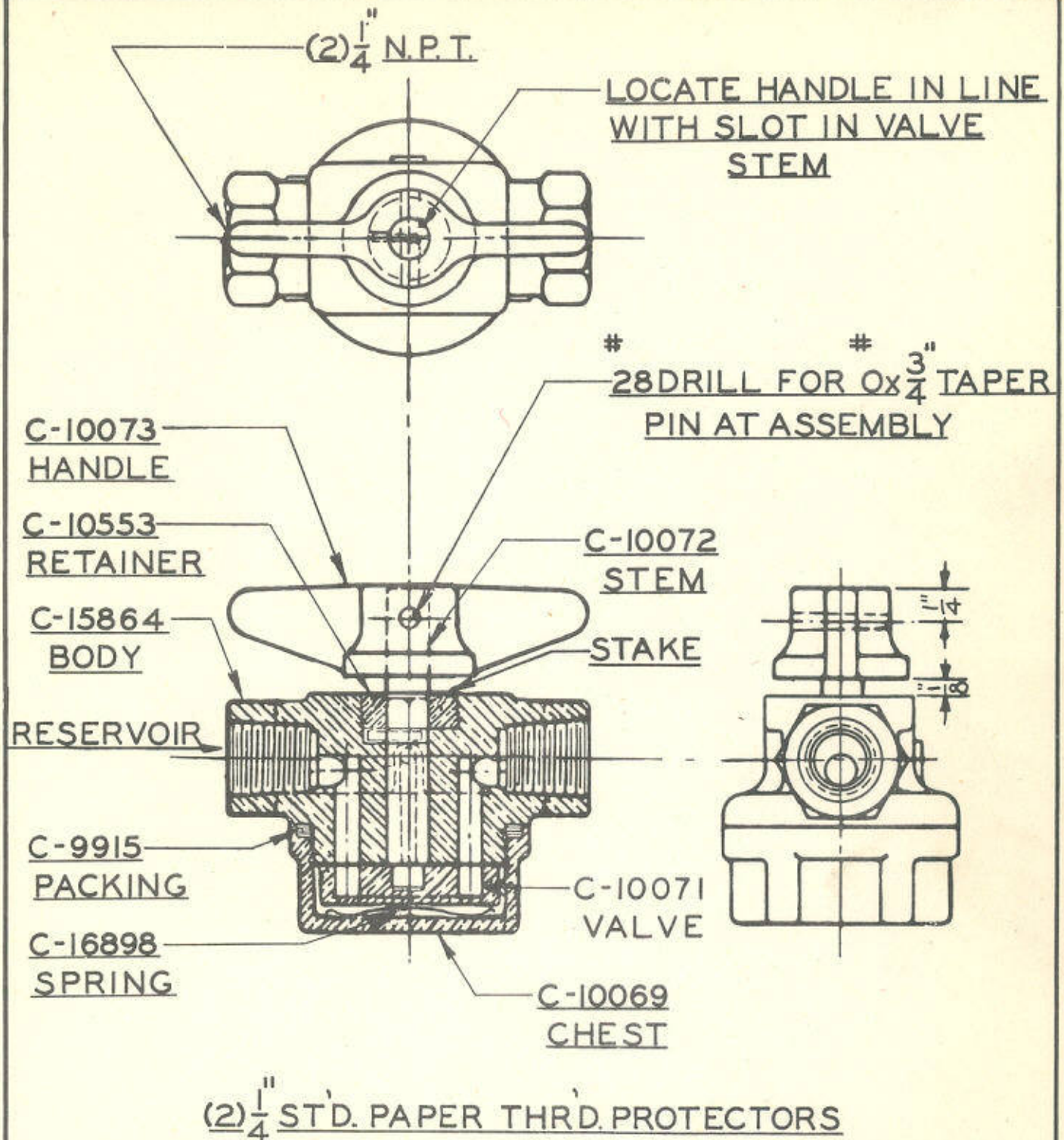


WHITE-916766
G.M.C.-2138769

| | | | | | | |
|---|---|---|---|---|---|---|
| | | | FRACTIONAL DIMENSIONS ± UNLESS OTHERWISE SPECIFIED | | | NATIONAL PNEUMATIC CO., INC. BOSTON, MASS. |
| | | | FINISH:- | | | NAME ROTARY CUT-OUT COCK |
| | | | HARDNESS:- | | | MATERIAL:- |
| | | | WEIGHT:- | ASSEM NO:- | | |
| L | NEW DRWG | 11-12 47 | TEST CODE:- | DRAWN BY:- | CHECKED BY:- | DATE:- 9-15-30 / SCALE:- 12 = 1-0 / C-14230 |
| REVISIONS | | | | | | |

GRIND OFF ROUGH FORGING NO. AND STAMP PART #C-18732 (G)

(F) 51/64" DRILL FOR BROACH

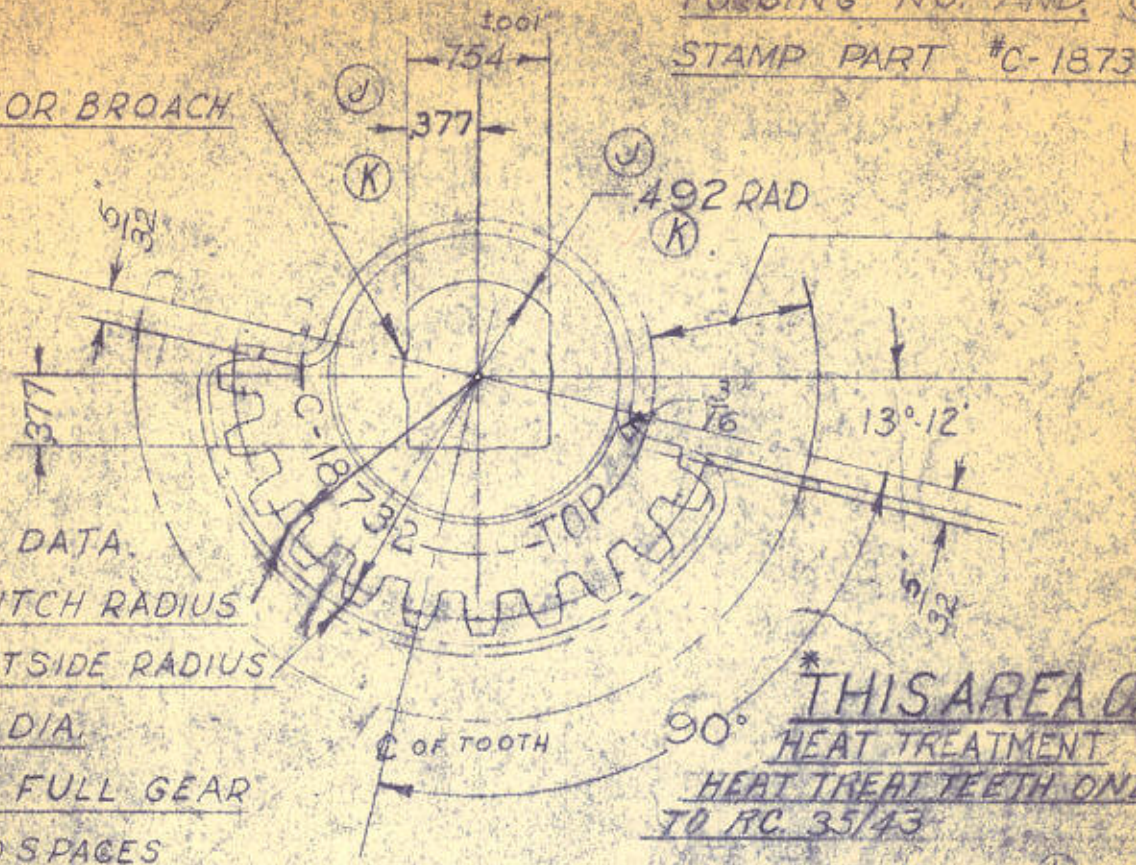


SPUR GEAR DATA.

1.250" ±.000/.004 PITCH RADIUS

1.344" ±.005 OUTSIDE RADIUS

2.500 PITCH DIA.

25 TEETH IN FULL GEAR

11 TEETH - 10 SPACES IN SEGMENT

10 DIA PITCH

*THIS AREA ONLY HEAT TREATMENT

HEAT TREAT TEETH ONLY TO RC. 35/43

(L)

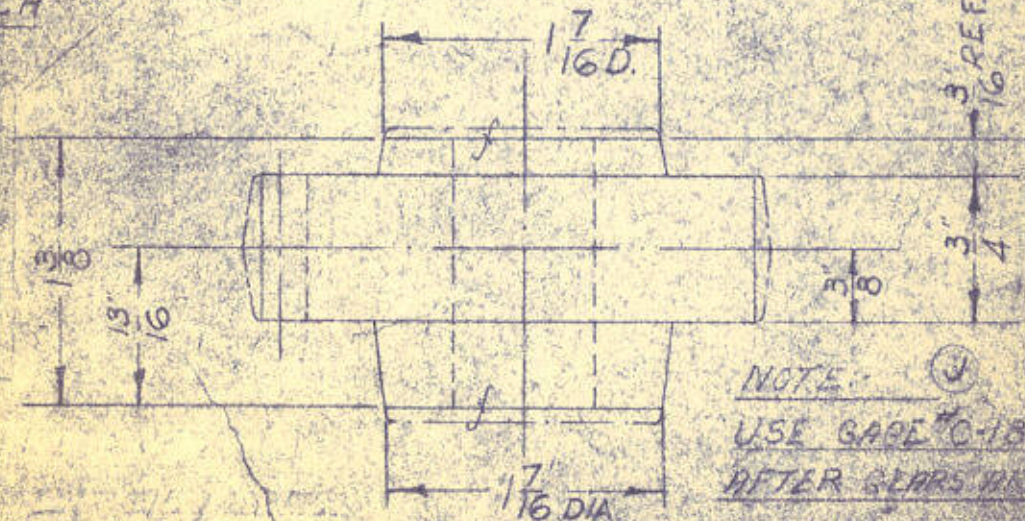


NOTE:- (J)

USE GAGE #C-18732-NPC/62 AFTER GEARS ARE MACHINED

TO MESH WITH C-18729 (R.H) C-18791

| | | |
|---|---|---|
| L | WATER QUENCH REMOVED | 2-16 32 |
| K | .377 WAS .375 ±.000/.005; .377 WAS .375 ±.000/.005 | 11-2 51 |
| K | .492 RAD. WAS .491 ±.005 | 11-2 51 |
| J | NOTE ADDED | 12-16 61 |
| J | [illegible] WAS [illegible] AND WAS .492 R. | 12-16 61 |
| H | HEAT TREATMENT CHANGED | [illegible] 51 |
| G | STAMP PART # C-18732 ADDED | 9-28 50 |
| F | WAS 51/32" DRILL | 2-17 50 |
| E | [illegible] FORGING | [illegible] |

REVISIONS

FRACTIONAL DIMENSIONS ± 1/64 UNLESS OTHERWISE SPECIFIED

FINISH:- PARKERIZE

HARDNESS:- SEE NOTE

WEIGHT:- | ASSEM. NO.:-

TEST CODE:- | DRAWN BY:- D.S. | CHECKED BY:-

NATIONAL PNEUMATIC CO.
RAHWAY, N. J.

NAME:- GEAR SEGMENT, (LH) DOOR SHAFT - PA. RAILROAD CAR

MATERIAL:- USE ROUGH FORGING C-15826 & MACH. TO THIS DWG.

DATE:- 4-1-46 | SCALE:- 12-1-50 | C-18732

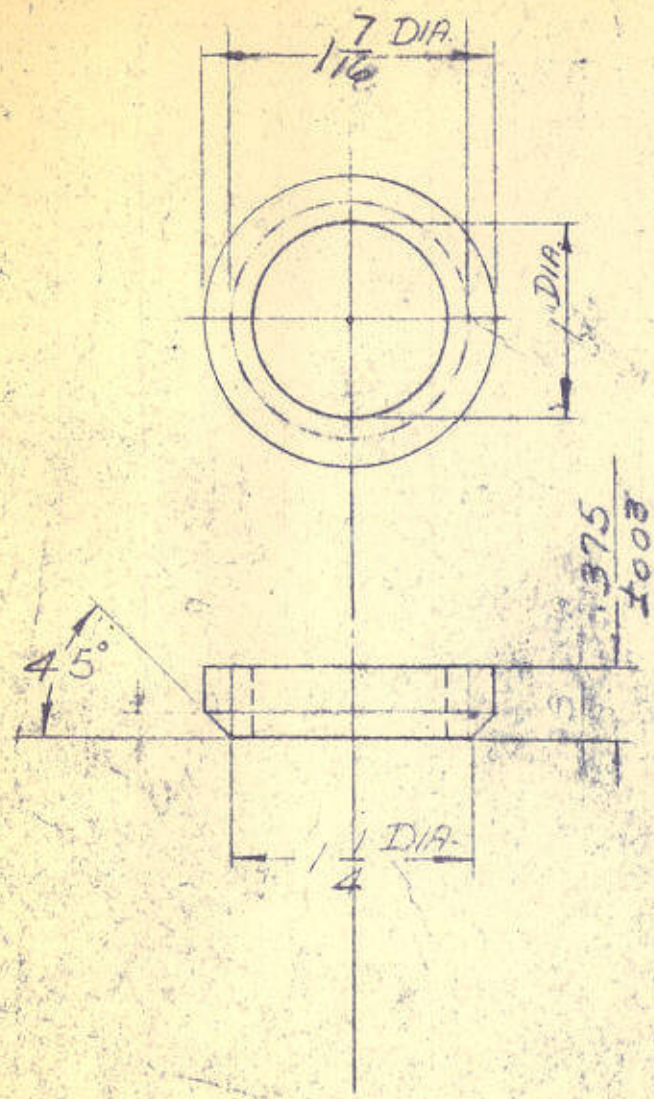


| | | | | | |
|---|---|---|---|---|---|
| | | | FRACTIONAL DIMENSIONS ± UNLESS OTHERWISE SPECIFIED | | NATIONAL PNEUMATIC CO. RAHWAY, N. J. |
| | | | FINISH:- LUBRITE | | NAME:- SPACER - END DOOR ETC. PA RAILROAD CAR |
| | | | HARDNESS:- | | MATERIAL:- 1" I.D. X 1 1/8" O.D. COLD DRAWN S. ST. TUBING |
| | | | WEIGHT:- | ASSEM. NO. #9539 #9548 | |
| | | | TEST CODE:- | DRAWN BY:- J.F.D. | CHECKED BY:- TCS |
| REVISIONS | | | | | DATE:- 4-9-46 SCALE:- 12"=1'-0" C-18789 |

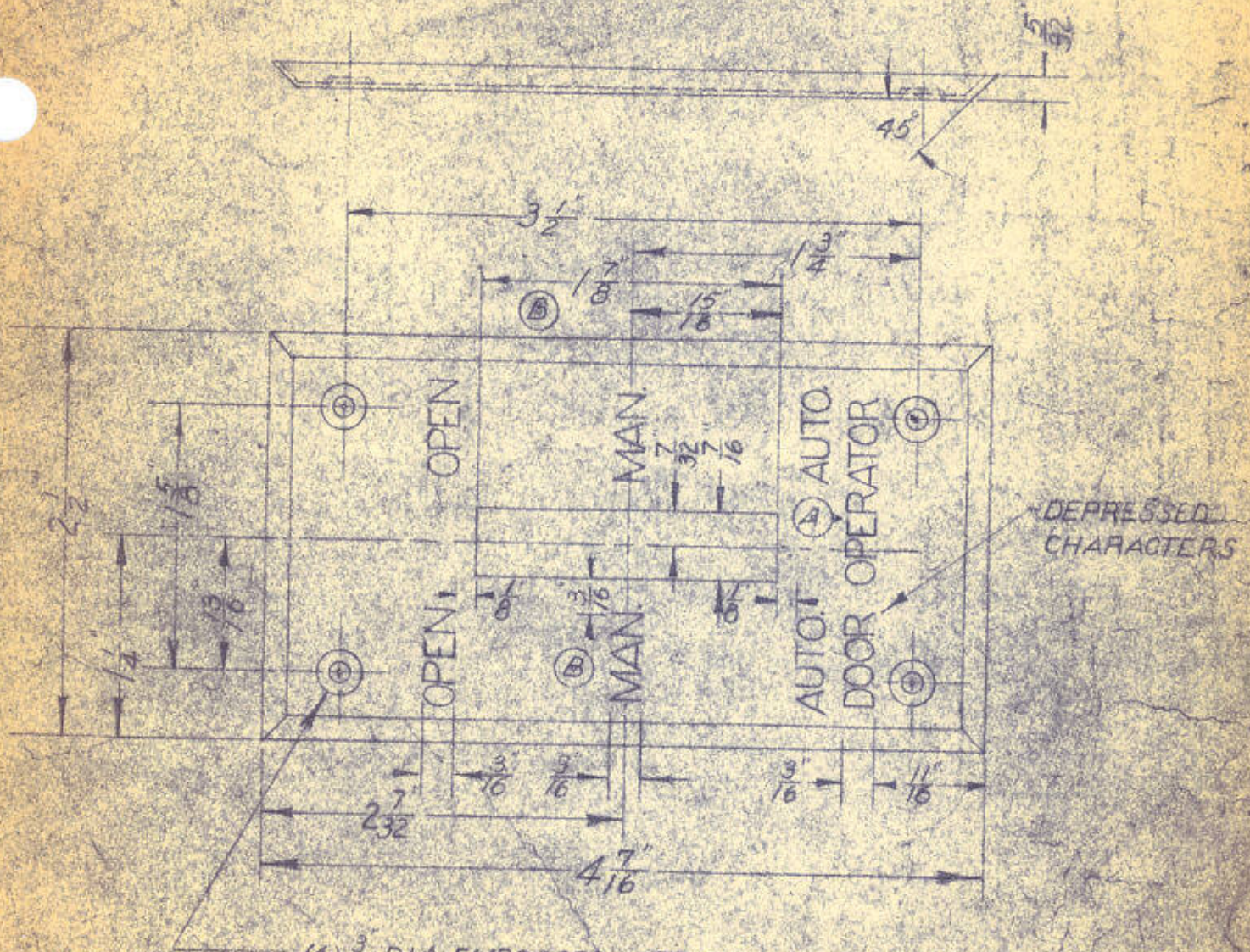


NOTE:- TO BE POLISHED & WRAPPED IN PAPER BEFORE PLACING IN STOCK.

| | | | | |
|---|---|---|---|---|
| C | NOTE ADDED | 5/17 SL | FRACTIONAL DIMENSIONS ± UNLESS OTHERWISE SPECIFIED | NATIONAL PNEUMATIC CO. RAHWAY, N. J. |
| B | | | FINISH:- | NAME:- COVER PLATE, TOGGLE SWITCH |
| A | DOOR OPER ADDED | 5-25 48 | HARDNESS:- | MATERIAL:- TYPE 304 STAINLESS STEEL SHEET #22 GAGE U.S.S. (.031) NO. 2B FINISH |
| REVISIONS | | | WEIGHT:- / ASSEM. NO.:- | DATE:- 11-3-49 / SCALE:- 12:10 / C-20251 |
| | | | TEST CODE:- / DRAWN BY:- / CHECKED BY:- | |

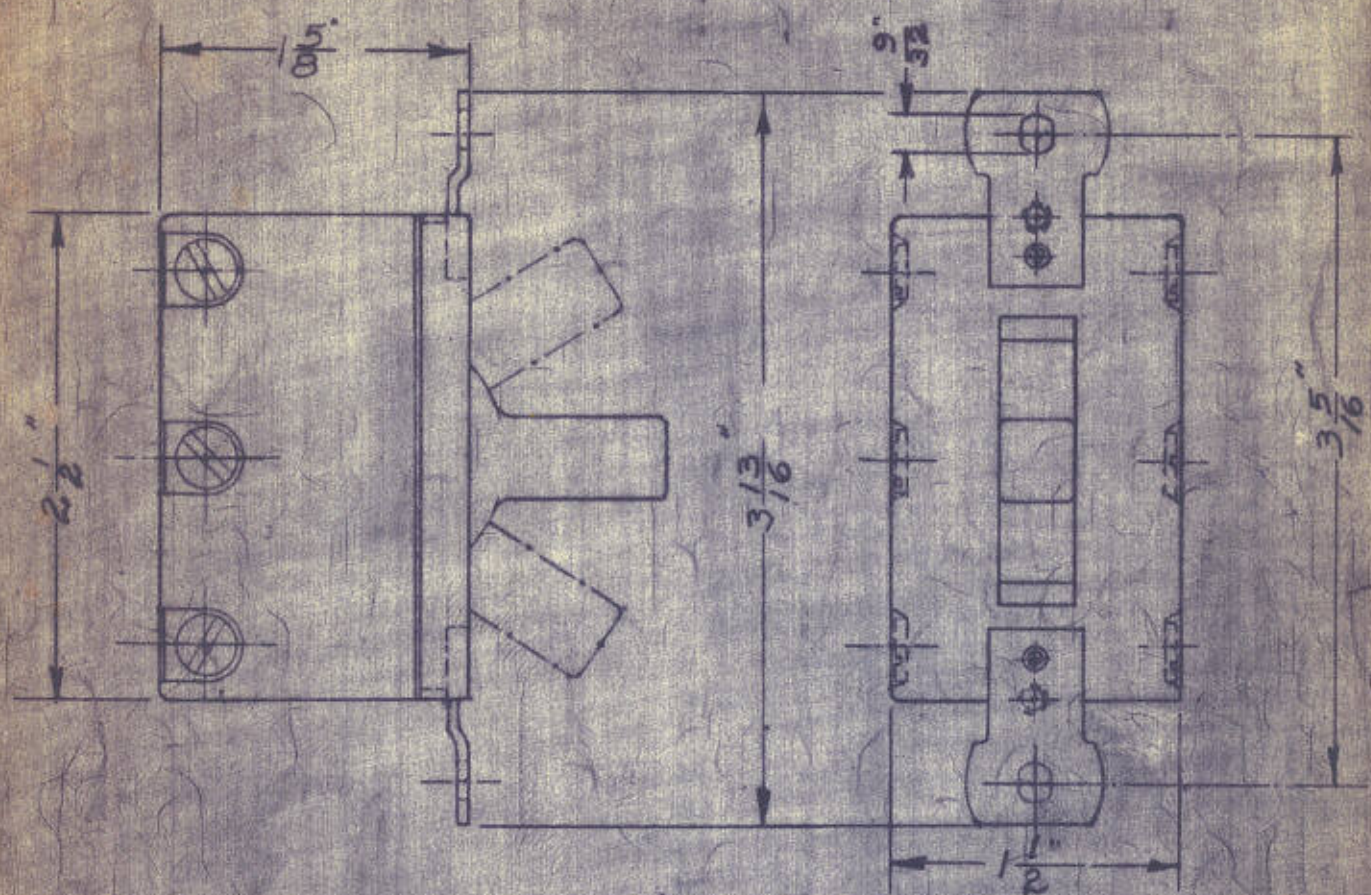


NOTE :-

1. TEST AT RATED VOLTAGE.
2. TERMINALS ON LEFT SIDE ARE INDEPENDENT OF TERMINALS ON RIGHT SIDE.
3. EACH LOWER TERMINAL MAKES WITH RESPECTIVE CENTER TERMINAL WITH TOGGLE IN UPPER POSITION.
4. EACH UPPER TERMINAL MAKES WITH RESPECTIVE CENTER TERMINAL WITH TOGGLE IN LOWER POSITION.
5. CENTER POSITION IS "OFF."

| | | | | | |
|---|---|---|---|---|---|
| | | | FRACTIONAL DIMENSIONS ± UNLESS OTHERWISE SPECIFIED | NATIONAL PNEUMATIC CO. RAHWAY, N. J. | |
| | | | FINISH:- | NAME:- (A) 2-CIRCUIT, 3-POSITION, CENTER OFF, TOGGLE SWITCH; 10 AMPS., 125 V. D.C. | |
| | | | HARDNESS:- | MATERIAL:- SEE ENGRG. FILE | |
| | | | WEIGHT:- / ASSEM. NO.:- | | |
| A | RATING WAS 15 AMP. | 11-10-47 | TEST CODE:- / DRAWN BY:- G. DAHL / CHECKED BY:- Y. Y. L. | DATE 11-22-46 / SCALE:- 12-1'-0" | C 44120 |
| | REVISIONS | | | | |

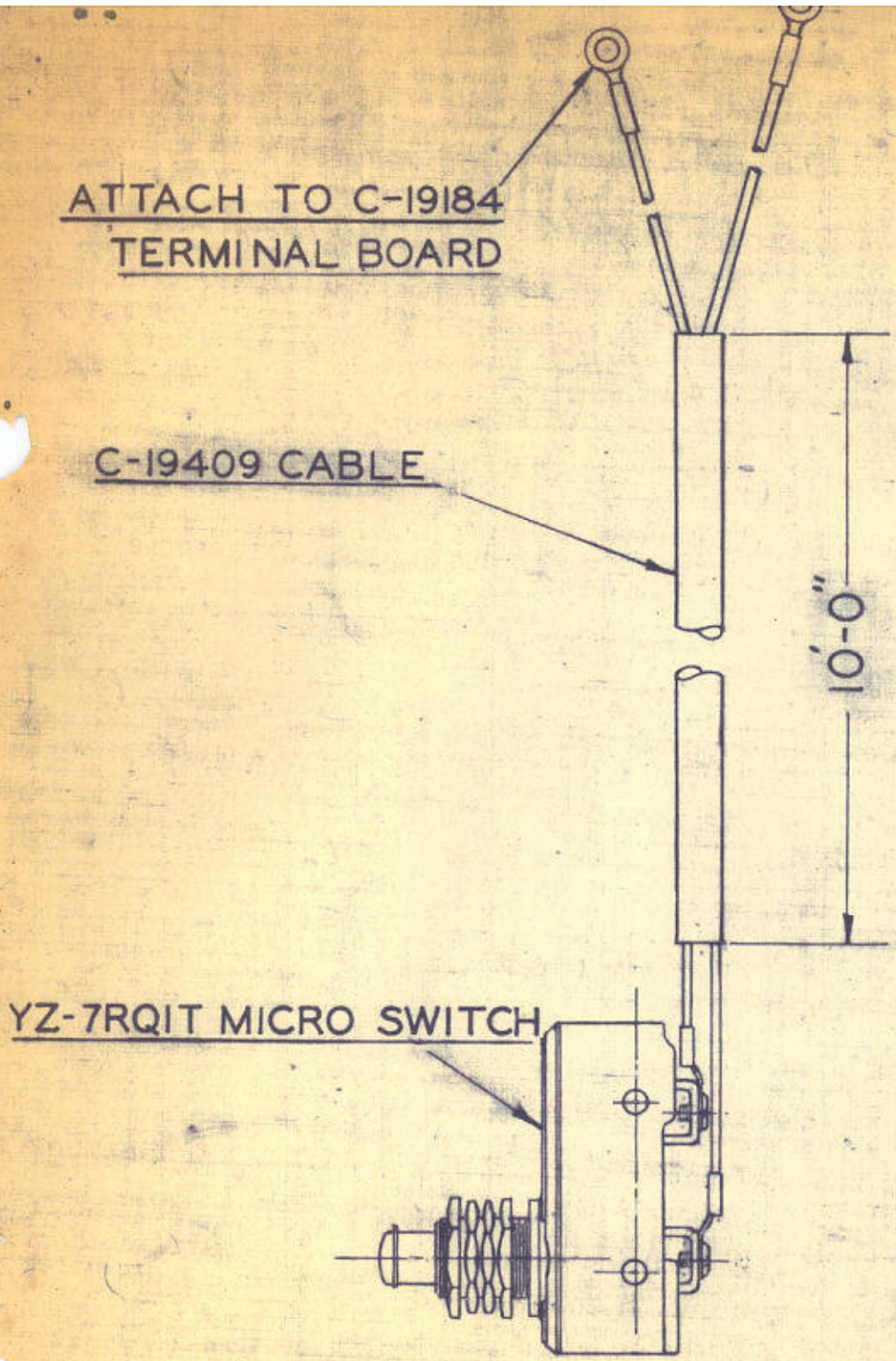


BILL OF MATERIAL

| | | | | | | |
|---|---|---|---|---|---|---|
| | | | FRACTIONAL DIMENSIONS ± UNLESS OTHERWISE SPECIFIED | | NATIONAL PNEUMATIC CO. RAHWAY, N. J. | |
| | | | FINISH:- | | NAME:- LOCK SWITCH & CABLE | |
| | | | HARDNESS:- | | MATERIAL:- | |
| | | | WEIGHT:- | ASSEM. NO.:- | | |
| | | | TEST CODE:- | DRAWN BY:- WINAR | CHECKED BY:- F.Y.L. | DATE 1-13-47 | SCALE:- FULL | C-44690 |
| REVISIONS | | | | | | |

N A T I O N A L  P N E U M A T I C  CO., I N C.
BOSTON * 420 LEXINGTON AVE., NEW YORK, N.Y. * CHICAGO

SUGGESTED SPARE PARTS for

N.P. End Door Operators (Swing Door Type) for R.R. Passenger Cars

(The following items are the estimated Spare Part requirements for daily servicing at one Terminal.)

| NUMBER OF CARS 1-20 | 21-50 | Above 50 | PART NO. N.P. CO. | NAME |
|---|---|---|---|---|
| 3 | 6 | 9 | C-18729 | GEARED LEVERS, R.H. & L.H. (Used with Operator Units as shown on Dwgs. 9542, 9559, 10026, 10027, 10478, and 10479 only) |
| 3 | 6 | 9 | C-19225 | GEARED LEVERS, R.H. & L.H. ..... |
| 3 | 6 | 9 | C-18732 | GEAR SEGMENTS, for L.H. Units ..... |
| 3 | 6 | 9 | C-18791 | GEAR SEGMENTS, for R.H. Units ..... |
| 1 | 2 | 3 | C-41820 | ENGINE CONNECTORS, with Spring (less Micro-Switch) ..... |
| 2 | 4 | 6 | C-42370 | TIME-DELAY RELAYS ("Agastat") 32 volt, d.c. |
| 2 | 4 | 6 | C-42720 | TIME-DELAY RELAYS ("Agastat") 64 volt, d.c. |
| 2 | 4 | 6 | C-41770 | TIME-DELAY RELAYS ("Agastat") 110 volt, d.c |
| 2 | 4 | 6 | C-54670 | TIME-DELAY RELAYS (Mercury Type) 32 volt, d.c. ..... |
| 2 | 4 | 6 | C-56640 | TIME-DELAY RELAYS (Mercury Type) 64 volt, d.c. ..... |
| 2 | 4 | 6 | C-56650 | TIME-DELAY RELAYS (Mercury Type) 110 volt, d.c. ..... |
| 2 | 4 | 6 | C-44120 | Three position Toggle Switch (Porter's) |
| 2 | 4 | 6 | C-44690 | Cable & YZ-7RQIT Micro Switch Assem. for Door Locks ..... |
| 2 | 4 | 6 | WZ-7RQIT | Micro Switches (Door Reversing Cutout) ..... |
| 3 | 6 | 12 | YZ-7RQIT | Micro Switches (Reversing) on Eng. Conn. |
| 1 | 2 | 3 | MRC-205-SFF | Bearings, for Top Door Shafts..... |
| 1 | 2 | 3 | C-19182 | HARNESS ..... |
| 1 | 2 | 3 | C-14230 | ROTARY CUTOUT COCK ..... (Plus the following parts: |
| 2 | 4 | 6 | | C-9915 Packings ..... |
| 2 | 4 | 6 | | C-10071 Rotary Valves ..... |
| 1 | 2 | 3 | | C-10073 Handles ..... |

Suggested Spare Parts for N.P. End Door Operators (cont'd.)

| NUMBER OF CARS 1-20 | 21-50 | Above 50 | PART NO. N.P. CO. | NAME |
|---|---|---|---|---|
| 1 | 2 | 3 | C-41000 | OPERATOR ENGINES, ..... (Plus the following parts): |
| 3 | 3 | 6 | ..... | C-7039 Gaskets ..... |
| 3 | 3 | 6 | ..... | C-8641 Gaskets ..... |
| 3 | 3 | 6 | ..... | C-8642 Felt Lubricating Rings ..... |
| 2 | 4 | 6 | ..... | C-8646 Expanders ..... |
| 2 | 4 | 6 | ..... | C-8647 Expanders ..... |
| 2 | 4 | 6 | ..... | C-8803 Cup Washers ..... |
| 3 | 3 | 6 | ..... | C-8804 Felt Lubricating Rings ..... |
| 3 | 3 | 6 | ..... | C-8805 Gaskets ..... |
| 3 | 3 | 6 | ..... | C-9831 Springs ..... |
| 6 | 12 | 24 | ..... | C-11320 Piston Cups ..... |
| 6 | 12 | 24 | ..... | C-11330 Piston Cups ..... |
| 3 | 3 | 6 | ..... | C-11365 Gaskets ..... |
| 1 | 2 | 3 | ..... | C-13225 Bushings ..... |
| 3 | 3 | 6 | ..... | C-13621 Cushion Seals ..... |
| 1 | 2 | 3 | C-41690 | EMERGENCY DOOR-CLOSING CYLINDER (L.H. Unit) ..... |
| 1 | 2 | 3 | C-41920 | EMERGENCY DOOR-CLOSING CYLINDER (R.H. Unit) ..... |
| | | | | (The above two parts used with Operator Units as shown on drawings 9542, 9559, 9739, 9740, 9807, 9808, 9965, and 9966 only.) |
| 1 | 2 | 3 | C-47990 | EMERGENCY DOOR-CLOSING CYLINDER (R.H. Unit) ..... |
| 1 | 2 | 3 | C-48000 | EMERGENCY DOOR-CLOSING CYLINDER (L.H. Unit) ..... |
| | | | | (The above two parts used with Operator Units as shown on drawings 10026, 10027, 10028, 10029, 10030, 10031, 10032, 10033, 10478, 10479, 10480, 10481, 10482, 10483, 10484, and 10485 only.) |
| | | | | (Plus the following parts): |
| 3 | 3 | 6 | ..... | C-8804 Felt Lubricating Rings..... |
| 3 | 3 | 6 | ..... | C-11493 Plunger Gaskets..... |
| 3 | 3 | 6 | ..... | C-11494 Lubricator Retainers ..... |
| 3 | 3 | 6 | ..... | C-13323 Gaskets ..... |
| 3 | 3 | 6 | ..... | C-18718 Springs ..... |
| 1 | 2 | 3 | ..... | C-55430 Brackets (Hinge Type) ..... |
| 2 | 4 | 6 | C-43640 | SPEED CONTROL FITTINGS ..... (Plus the following parts): |
| 4 | 8 | 12 | ..... | C-9047 Gaskets..... |
| 4 | 8 | 12 | ..... | C-15094 Gaskets ..... |
| 2 | 4 | 6 | ..... | C-15957 Nuts ..... |
| 2 | 4 | 6 | ..... | C-19274 Screws ..... |

Suggested Spare Parts for N.P. End Door Operators (cont'd)

| NUMBER OF CARS 1-20 | 21-50 | Above 50 | PART NO. N.P. CO. | NAME |
|---|---|---|---|---|
| 2 | 4 | 6 | C-43720 | MAGNET VALVES (Pressure Type) 32 volt, d.c. ..... |
| 2 | 4 | 6 | C-43730 | MAGNET VALVES (Pressure Type) 64 volt, d.c. ..... |
| 2 | 4 | 6 | C-43670 | MAGNET VALVES (Pressure Type) 110 volt, d.c. ..... (Plus the following parts): |
| 3 | 6 | 9 | ..... | C-4417 Springs ..... |
| 2 | 4 | 6 | ..... | C-8920 Valve & Stems ..... |
| 2 | 4 | 6 | ..... | C-21642 Push Rods ..... |
| 3 | 6 | 9 | ..... | C-16630 Coils, 32 volt, d.c. ..... |
| 3 | 6 | 9 | ..... | C-31670 Coils, 64 volt, d.c. ..... |
| 3 | 6 | 9 | ..... | C-41950 Coils, 110 volt, d.c. ..... |
| 2 | 4 | 6 | C-48370 | MAGNET VALVES (Exhaust Type) 32 volt, d.c. ..... |
| 2 | 4 | 6 | C-48380 | MAGNET VALVES (Exhaust Type) 64 volt, d.c. ..... |
| 2 | 4 | 6 | C-48390 | MAGNET VALVES (Exhaust Type) 110 volt, d.c. ..... (Plus the following parts): |
| 3 | 6 | 9 | ..... | C-4417 Springs ..... |
| 2 | 4 | 6 | ..... | C-20736 Push Rods ..... |
| 2 | 4 | 6 | ..... | C-19969 Discs (Silencers) ..... |
| 3 | 6 | 9 | ..... | C-20051 Springs, for Silencer Discs |
| 2 | 4 | 6 | ..... | C-48320 Valves ..... |
| 3 | 6 | 9 | ..... | C-48340 Coils, 32 volt, d.c. ..... |
| 3 | 6 | 9 | ..... | C-48350 Coils, 64 volt, d.c. ..... |
| 3 | 6 | 9 | ..... | C-48360 Coils, 110 volt, d.c. ..... |