HOPPERS: Hoppers and hopper mechanisms are similar to previous types, using the enclosed and stationary types. All hoppers are equipped with a device designed to prevent any syphoning of contaminated water or foreign matter back into the water system; it is known as a vacuum breaker. Two types of vacuum breakers are furnished for various application and their operation is as shown on Fig. 119 & 120. You will note that during the flushing operation, water under pressure closes upper port and flows into fixture. When not flushing, valve drops, opening upper port, venting fixture piping to atmosphere. All double pan hoppers are equipped with chokes to reduce pressure.

Pullman Standard stainless steel double pan hoppers are used in roomettes. These are standard enclosed type and use Crane Co.'s 3/8" vacuum breaker as shown in Figure 119. Note that vacuum breakers are mounted in minimum of 6" above highest flood level of hopper bowl. Public toilets have Duner Co.'s No. 506½ stationary type with same 3/8" vacuum breaker.

Crane Co.'s TP 18234 stationary hoppers are used in Bedroom "N" annex, equipped with "Beta" type flushing valve and "Vigilant" vacuum breaker. This type vacuum breaker forms a portion of the flush valve assembly as shown on Figure 120. The "Beta" flush valve operates like the flush portion of the tilting hopper valve. When the handle on the flush valve is depressed, it forces the handle stem against the auxiliary valve sleeve and permits water under 25 lbs. pressure to pass through valve and on into bowl, allowing just enough water (1 gallon approximately) to properly flush. Internal construction is similar to the flushing valve shown on page 6 of the "Instructions for Tilting Hopper Maintenance and Overhauling", except for hand operation and lack of a main valve return spring. The new valve is stationary, permitting gravity return of main valve to its seat.

Top of hopper, as shown on Figure 121, must be level to prevent water splashing out at high speeds and especially when car is going around curves. This can be tested with the use of a spirit level that is a part of the generator aligning device, Cat. No. Q-919, as shown on Figure 121. Make sure car is on a straight piece of track and not leaning to any extent. With the pressure at 25 lbs. and the hopper valve operating properly, along with the top of the hopper bowl being level, the water seal will be 1" which is the proper level to be maintained. Leaking valves and occasionally high pressure, may result in this level rising another 1 1/4" effecting a seal of approximately 2 1/4", resulting in too much water in the bowl. Bowls that are found not level can be readily leveled by cutting a gasket on a bias, as shown in Figure 121, for the outlet connection, and adding shims below in cases where the bowl is low in front. The reverse of this operation is necessary to level up a bowl that is too high at the front edge.

WASHSTANDS: Washstands used in various locations are as follows:

General Toilet: Crane Co.'s RR-110-F porcelain corner type, with pop-up waste attachment and soap dispenser. Size 12 x 12" Cat. No. W 2510.

Roomettes and Bedroom annexes: Folding type stainless steel bowl with aluminum frame.

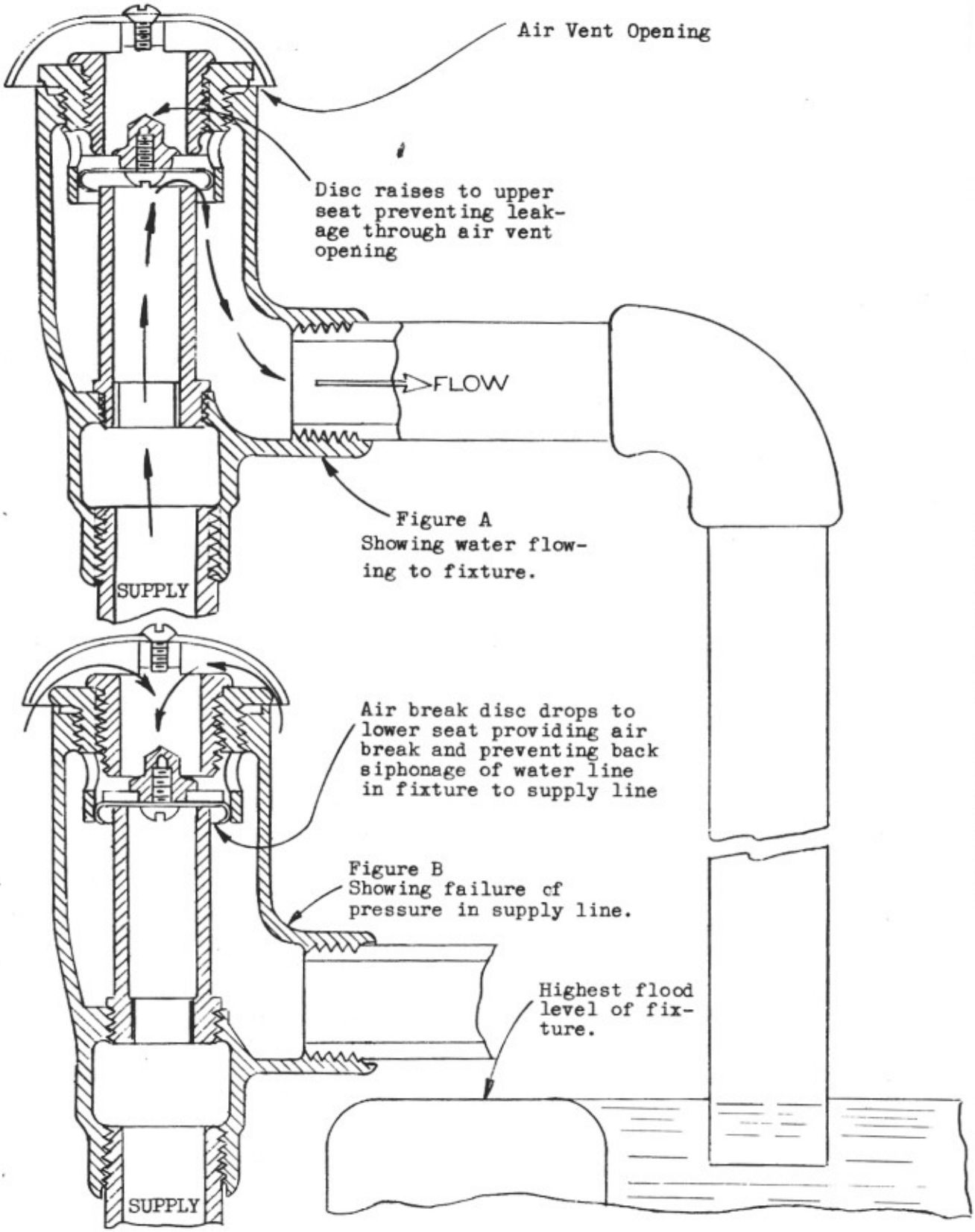

OPERATION OF CRANE 7830 VACUUM BREAKER

Figure 119

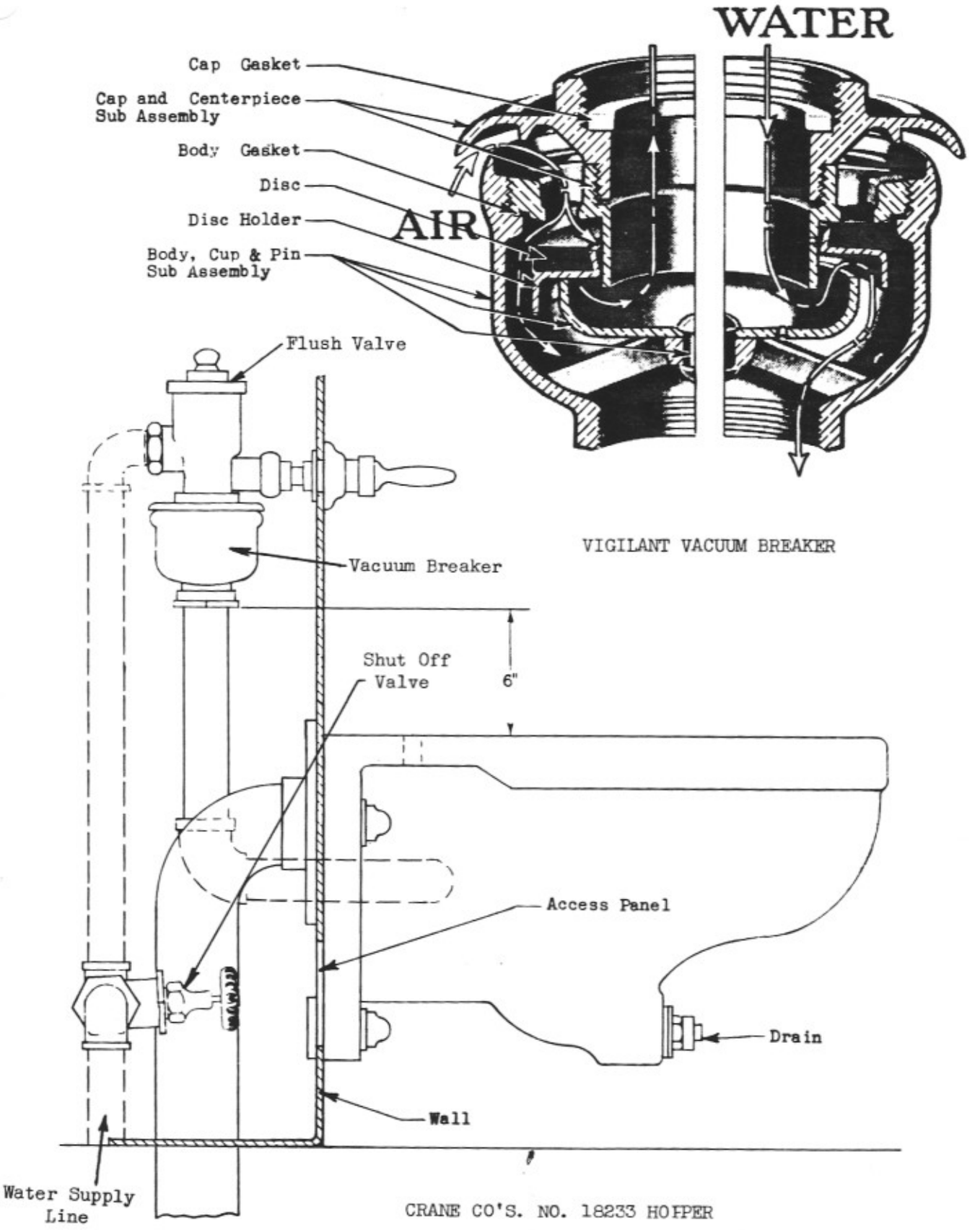

Figure 120

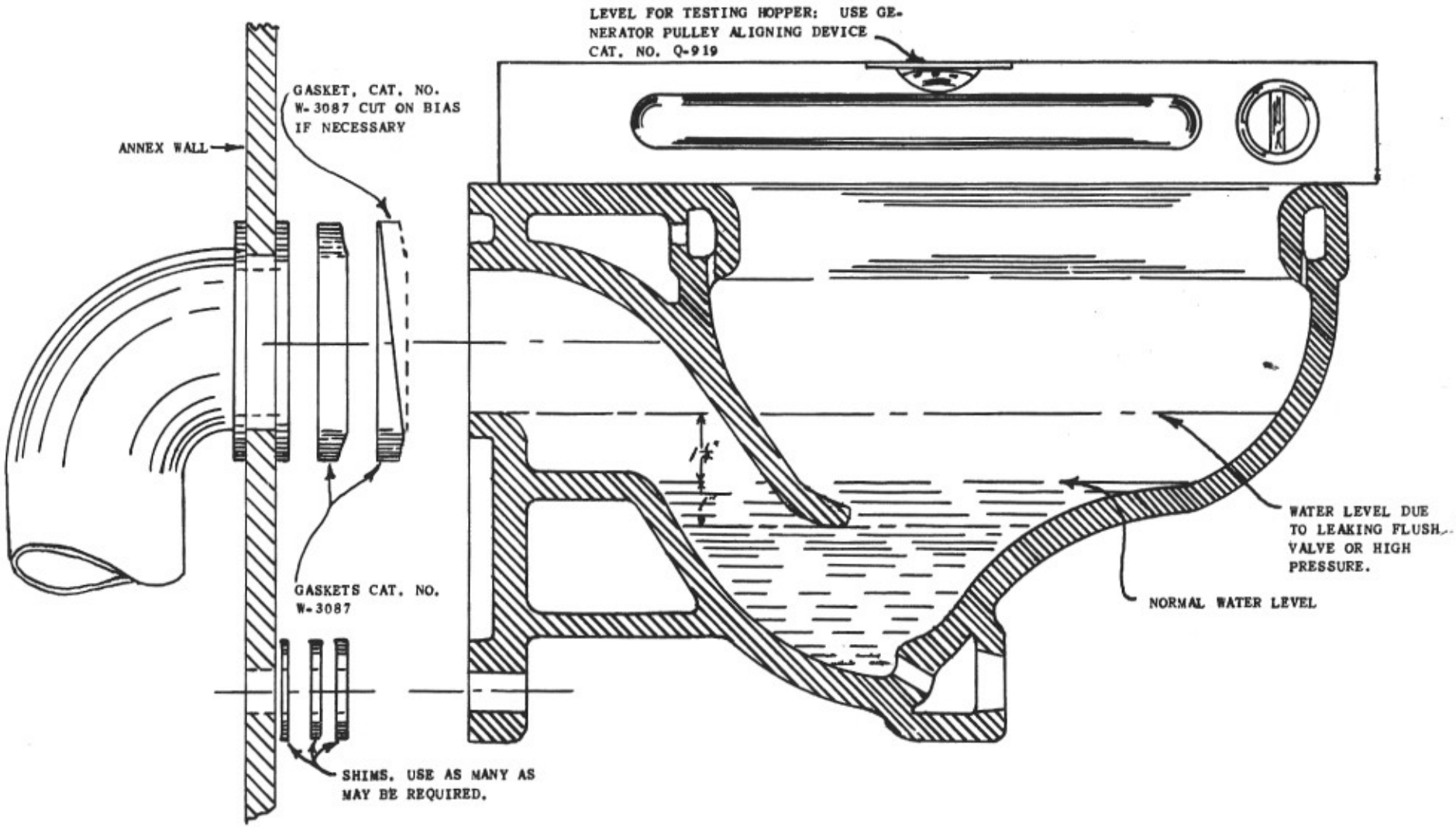

LEVELING OF WALL TYPE STATIONARY HOPPER

Figure 121

WATER COOLERS

The mechanically refrigerated coolers used, are E.A. Lundy Company's type W.C. - 616 Cat. No. W 4665.

INSPECTION: Items are inspected on the same frequency basis as comparable items of air-conditioning equipment.

COOLER - E. A. LUNDY TYPE W. C. 616

The WC 616 water cooler, Figure 122, is a self-contained unit using a hermetically sealed compressor unit. The cooling unit is sealed in upper section of cooler, while condensing unit and temperature control are located in lower section.

COOLING UNIT: The cooling unit consists of stainless steel water tubing and copper refrigerant tubing imbedded in a cast aluminum block, cast around a stainless steel storage tank which has a capacity of six quarts.

EXPANSION VALVE: Refrigeration control is obtained by use of 1/4 ton non-adjustable automatic type expansion valve with thermal bulb screw clamped to the aluminum casting.

COMPRESSOR UNIT: The compressor unit consists of a twin cylinder reciprocating type compressor and a 1/3 H.P. split phase Universal compressor motor, hermetically sealed and running in a bath of oil. (Frigidaire 150 viscosity). This charge is sufficiently large to allow for small losses when making minor repairs. Replacement units will carry a full charge of oil. Spring mountings are used to isolate compressor from supporting frame. An automatic reset overload protector is used. The compressor motor starting winding is energized through the contacts of a non-adjustable relay, the coil of which is in series with the motor main winding; the coil is energized by the heavy in-rush of starting current. When the motor comes up to speed the current decreases and relay drops out opening starting circuit. See wiring diagram, Figure 123.

In order to relieve compressor motor of heavy starting load, a small by-pass fitting is installed between the suction side and the discharge side of the compressor. During compressor operation a minute quantity of the total gas compressed is returned to the suction side. Immediately after the compressor stops, the compressed gas trapped above the piston escapes to the underside of the piston and the pressure is rapidly balanced.

CONDENSER UNIT: Is a 3-row copper type finned condenser with a 1/100 H.P. shaded pole fan motor (Cat. No. W-4922) which is entirely independent of compressor motor. No starting winding or condenser is used in this type of motor. The stator winding is not distributed in slots but is wound on projecting poles.

The condenser fan, surrounded by a shroud draws air through condenser. The motor is permanently lubricated and mounted on rubber grommets. The system is charged with two pounds of Freon F-12, a steel receiver tank is mounted in the lower compartment. No. 95-5 hard solder is used to make all sweated joints.

TEMPERATURE CONTROL: Opens and closes the circuit to both the compressor and condenser fan motor. The thermal bulb is screw-clamped to the outlet side water line. The control adjustment should be checked immediately after the machine has cycled off. To check the temperature of the water, draw off 1/2 pint, then place a thermometer in a cup and slowly draw a sufficient quantity of water, reading should be between 44 and 50 degrees, steady draw rate not to exceed thirty gallons per hour which is regulated by the pressure regulating valve set at 20 pounds.

SERVICE VALVES: There are four service valves used; receiver outlet, compressor suction, compressor discharge, and hermetic fitting on compressor in suction space. These valves allow for the isolation of the various parts of the system and for pumping down. These service valves must be opened to both ports; i.e. off back seat by a maximum of one turn.

The head pressure is measured by attaching high pressure test gauge to capped branch of the by-pass tee after back-seating both of the compressor service valves.

The suction pressure is measured by attaching a hermetic service valve test kit and low pressure test gauge to the test port on compressor.

RENEW BY-PASS: Back-seat both compressor valves, remove purge cap, lose the small amount of F-12 in line, and apply new by-pass.

RENEW EXPANSION VALVE: Close receiver outlet valve W-4858 and pump down until ~~suction pressure reaches~~ one pound.

Close compressor suction valve. If the pressure remains below zero, a slight amount of F-12 should be released from the receiver tank.

CAUTION: Do not open the system when the pressure reading is below zero. Remove old valve and apply new.

RENEW COMPRESSOR: Close receiver outlet valve W-4920 pump down, and close compressor suction valve. Remove compressor and apply new; purge air at discharge valve; test for leaks, and check operation.

ADDING REFRIGERANT: Attach hermetic service valve kit and gauge to compressor; connect charging hose to the branch provided. After necessary connections are made, the charging hose should be purged until sufficient refrigerant escapes to drive out air. Add in small amounts until the charge has been increased to proper level.

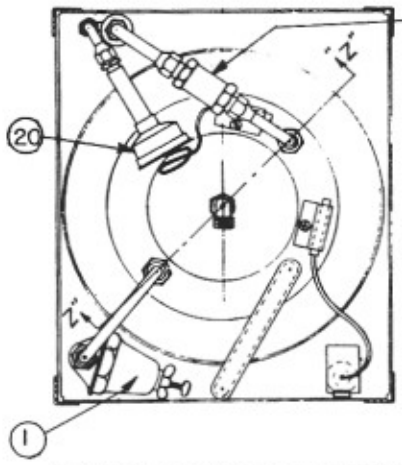

GENERAL CAPACITY DATA GPH 50° OUTLET WATER				
INLET WATER TEMPERATURE	ROOM TEMPERATURE			
	70	80	90	100
70	24.5	23.8	22.2	20.7
80	16.7	15.5	14.5	13.4
90	12.8	11.8	10.0	9.3
100	10.2	9.4	8.9	7.0

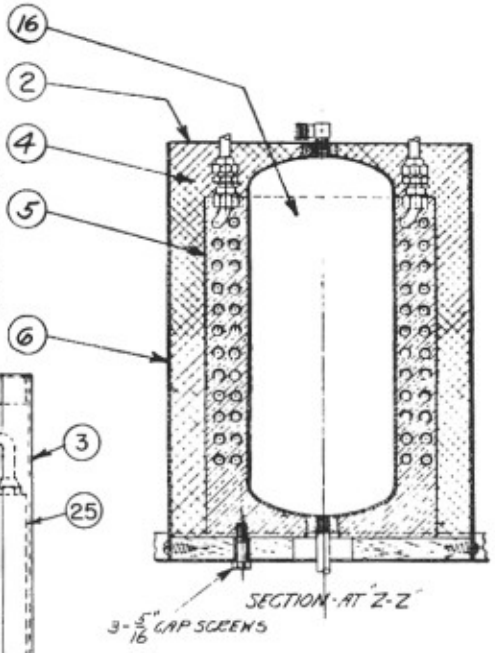

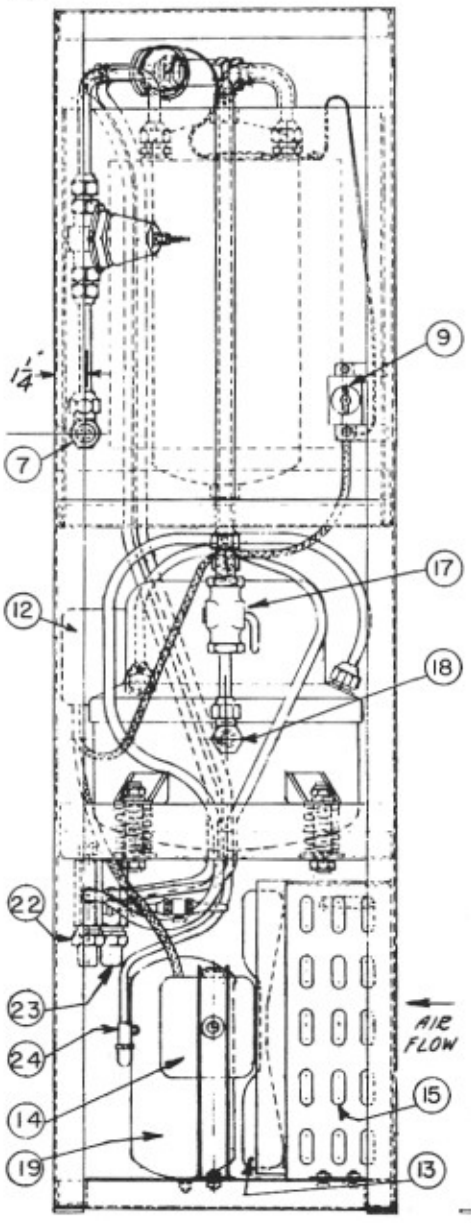

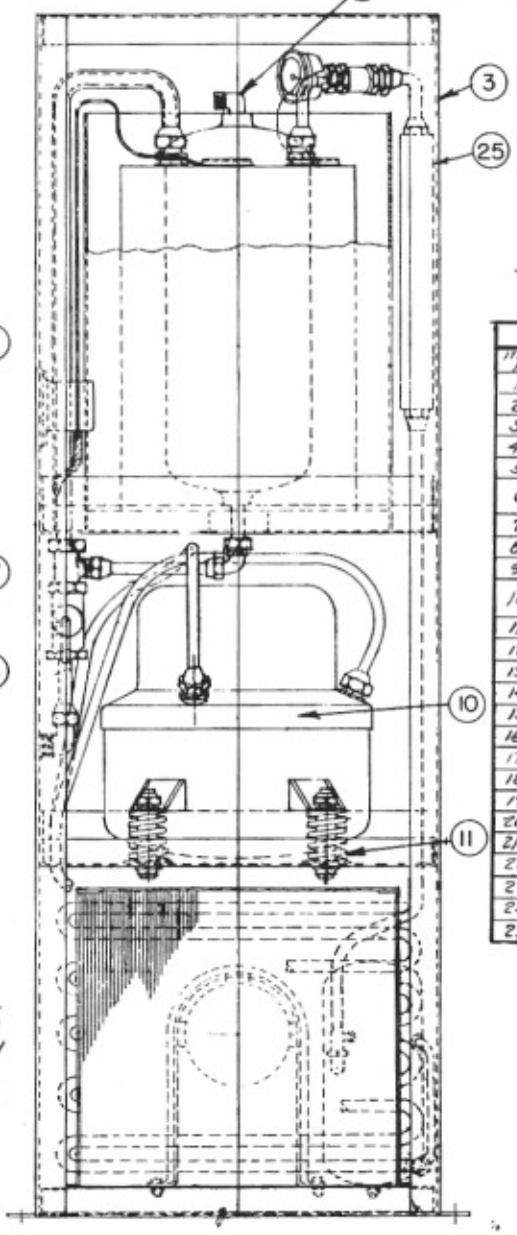

BILL OF MATERIAL	
ITEM NO.	DESCRIPTION
1	WATER PRESSURE REGULATING VALVE
2	HYDROLINE SEAL
3	FRAME ASSEMBLY
4	HEAT EXCHANGER INSULATION
5	HEAT EXCHANGER
6	HEAT EXCHANGER SHEET METAL INSULATION CONTAINER.
7	INLET WATER CONNECTION - 3/8" I.P.S. M
8	OUTLET WATER CONNECTION - 3/8" - I.P.S. - M
9	THERMOSTATIC CONTROL
10	MOTOR & COMPRESSOR - HERMETIC 110 VOLTS, SINGLE PHASE, 60 CYCLE
11	VIBRATION INSULATOR
12	JUNCTION BOX
13	CONDENSER FAN
14	CONDENSER FAN MOTOR
15	CONDENSER
16	HEAT EXCHANGER STORAGE TANK
17	DRAIN VALVE
18	DRAIN CONNECTION - 3/8" I.P.S. - M
19	LIQUID RECEIVER
20	EXPANSION VALVE
21	SUCTION CHECK VALVE
22	SUCTION LINE SERVICE VALVE
23	DISCHARGE LINE SERVICE VALVE
24	RECEIVER SERVICE VALVE
25	REFRIGERANT HEAT INTERCHANGER

DRINKING WATER COOLER

MODEL WC-616

Figure 122