KEY TO THE COLOR PLATES

RED	*Main-Reservoir Pressure*
PINK	*Brake-Cylinder Pressure*
GREEN	*Auxiliary-Reservoir Pressure*
BLUE GREEN	*Feed-Valve-Pipe Pressure*
LIGHT GREEN	*Equalizing-Reservoir Pressure*
ORANGE	*Atmospheric Pressure*
YELLOW	*Brake-Pipe Pressure*
BLUE	*Live Steam*
LIGHT BLUE	*Exhaust Steam*
PURPLE	*Application-Chamber Pressure* *Supplementary-Reservoir Pressure*
GRAY	*Feed-Valve-Pipe Pressure*
BROWN	*Low-Pressure Air-Cylinder Pressure*
LAVENDER	*Signal-Pipe Pressure*

CAR HEATING

Serial 2074 Edition 1

THE VAPOR CAR HEATING COMPANY'S VAPOR SYSTEM

CONSTRUCTION AND OPERATION

1. Principles of Operation.—Broadly speaking, there are two systems of steam heat used in railway train service; one is a high-pressure system, while the other is a low-pressure or vapor system.

Both systems are constructed with a main supply pipe extending from the boiler head in the cab to the rear of the train. This supply pipe is connected between cars with rubber hose and steam-coupler connections, and each car has a branch pipe leading to the heating pipes in the car. This supply pipe with its steam couplers and its branch pipes is called the *steam-heat train line*.

The train line is situated underneath the coaches and so is directly exposed to the cooling effect of the weather. This cooling influence causes considerable condensation to take place, which increases with the distance of the car from the locomotive. The condensation reduces the steam pressure, and adds moisture to the steam, so that the steam pressure in the train line is considerably less in the rear of the train than it is at the front end. This drop in train-line pressure is increased further in the high-pressure heating systems, by the steam that is taken from the train line at each car. Each car is supplied with steam at the pressure of the steam in the train line at that point. As

the temperature of steam is directly dependent on its pressure, the temperature of the radiation in the first car may be 50 or 60 degrees higher than the temperature of the radiation in the last car. This condition often makes it necessary to overheat the head end of a train in order to get a temperature in the rear cars that is sufficient for comfort.

2. The vapor system was designed to overcome the drawbacks of the high-pressure systems. A high-pressure steam supply is carried in the train line. The system consists of a number of properly arranged heating coils inside of the car, into which may be admitted, as desired, live steam automatically maintained at atmospheric pressure.

The heating coils in the car are open to the atmosphere so that the pressure in the coils is always at atmospheric pressure. The high-pressure supply is automatically reduced to atmospheric pressure by means of a thermostatic vapor regulator. As the steam in the heating coils of all the cars is at atmospheric pressure, it follows that the radiation in all the cars must be at the same temperature, that is, at about 212° F.

The vapor system of car heating is a direct-steam system, as steam is taken from the locomotive boiler and passes along through the train pipe, from which the supply of steam for each car is drawn. The pressure carried in the radiating pipes is at atmospheric pressure and cannot be varied by manipulating the cut-out valves. The pressure in the heating coils is controlled by an automatic valve, called the vapor regulator, which maintains the steam at atmospheric pressure regardless of the pressure in the train line.

The automatic steam-admission valve of the vapor regulator is actuated by an expansive diaphragm and a bell-crank lever. When the cut-out valve is open, the supply of steam to the radiating pipes is controlled by the temperature of the water of condensation that is escaping through the outlet for condensation under the car. The automatic valve in the regulator is connected to the expansive diaphragm in the outlet of the apparatus in such a manner that, when the water of condensation is cool, the automatic valve opens and allows a proper supply

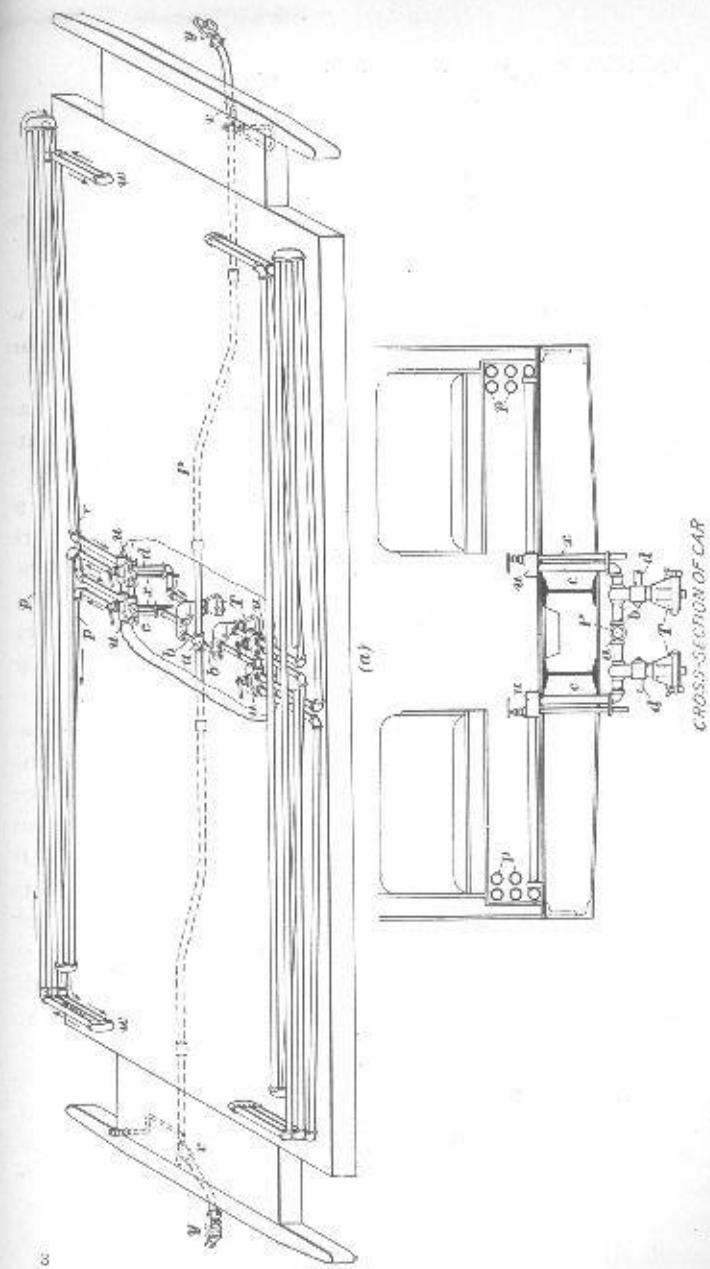

of steam to flow into the radiating pipes. When the trap becomes so warm that the water comes out hot or mixed with steam, the expansive diaphragm operates to close the automatic valve in the vapor regulator and thus reduces the supply of steam flowing into the radiating pipes. Thus, it will be seen that both the vapor system and the direct-steam systems admit live steam to the radiating pipes. The distinguishing features are that the vapor system regulates the admission of live steam to the radiating pipes, but allows condensation to escape to the atmosphere freely at all times; the high-pressure systems admit steam freely at all times to the heating coils, but regulate the discharge of the water of condensation from the radiating pipes. In both systems this regulation is accomplished by an automatic valve on each car.

3. Piping Arrangement.—Fig. 1 shows the arrangement of piping for a steel passenger coach, while Fig. 2 illustrates the method of piping the vapor regulator valves. In the illustrations, *y, y* are the hose couplings; *v, v*, the end train-line valves; *P* is the train line; *a*, the strainer cross; and *x*, the cut-out-valve drip pipes. On each side of the car, *T* is the vapor regulator and trap; *u, u* are the vapor cut-out valves; and *p, p* and *r* are the radiating pipes. The radiation shown in the illustration consists of one three-pipe coil and one two-pipe coil for each side of the coach. When the end train-line valve *v* nearest the locomotive and the cut-out valves *u* are open, steam from the locomotive boiler passes into the train line *P* at reduced pressure, and will pass from the strainer cross *a* through the branch pipe *b* to the vapor regulator *T* on each side of the car, where the steam will be reduced to vapor at atmospheric pressure and will have a temperature of about 212° F. It will then pass through pipes *c* to the cut-out valves *u*, as shown in view (*b*), then through these valves to the lowest pipe of the three-pipe radiating coil *p* which leads to the fitting *w* at the end of the car. The steam will then enter the two upper radiating pipes *p* and pass to the opposite end of the car, flowing through the fitting *w'* and the lower return pipe to the left cut-out valve *u*, thence through the right cut-out

valve *u* into the two-pipe coil as indicated by the arrows. It returns through the pipe *r* to the right cut-out valve *u*, and through pipe *d* to the trap of the vapor regulator.

The temperature of the steam and water of condensation in the trap of the regulator will actuate the automatic valve in the vapor regulator by means of the expansive diaphragm so as to maintain the proper pressure and temperature of steam in the

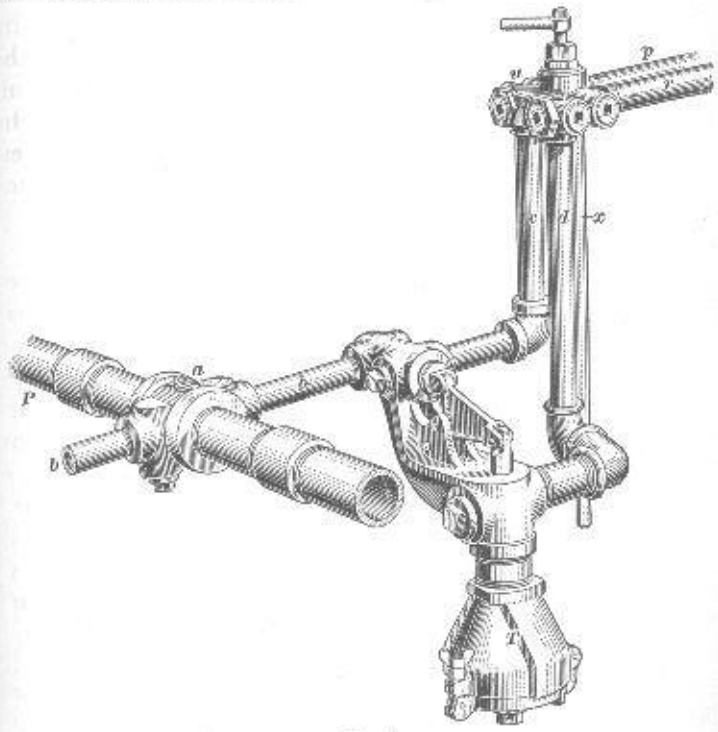

Fig. 2

radiating pipes. The water of condensation has free outlet to the atmosphere at all times, thus preventing it from freezing in the heating system.

If one of the cut-out valves *u* is placed in closed position, the steam entering the cut-out valve will not pass into the radiating pipes controlled by that cut-out valve but will pass through the other coil and then into pipe *d* and to the trap of the vapor

regulator, which will operate in the same manner as if all the radiating pipes were cut in. If both valves *u* are closed, steam will be shut out of both coils. The water of condensation that, when the cut-out valves are closed, will form in the radiating pipes from the steam that is trapped in the pipes, will leave the pipes by the drip pipes *x* instead of through the trap of the vapor regulator.

4. Vapor Regulator.—Fig. 3 is a sectional view of a No. 425 vapor-regulating valve; such a valve (with shield *c* removed) is shown in Fig. 2 as applied to the piping shown in Fig. 1.

In Fig. 3 the parts shown are: *a*, valve body; *b*, cap; *c*, shield; *d*, strainer; *e*, expansive diaphragm; *f*, setscrew; *g*, operating

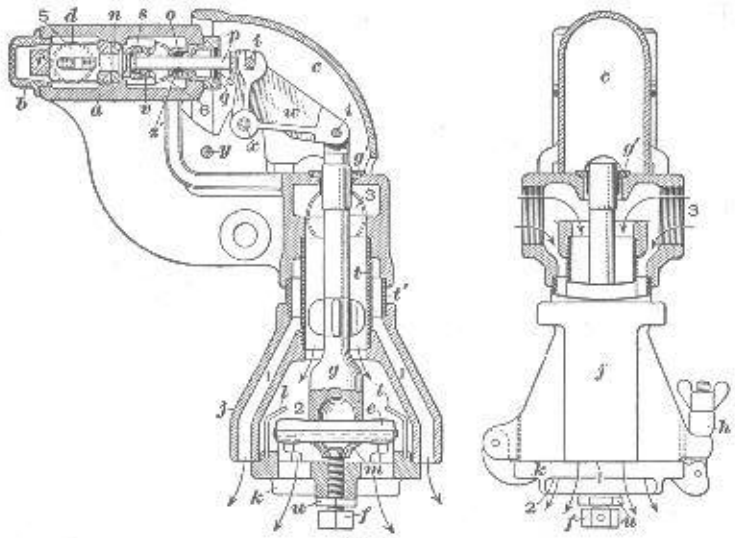

Fig. 3

rod; *h*, cover lock; *i*, lever pins; *j*, lower casing; *k*, hinge cover; *l*, diaphragm hooks; *m*, diaphragm plate; *n*, disk; *o*, stuffing-box; *p*, stem; *q*, bonnet; *r*, disk holder; *s*, valve; *t*, inside tube; *t'*, outside tube; *u*, locknut; *v*, valve nut; *w*, lever; *x*, fulcrum pin; *y*, shield bolt; *z*, dust protector; *z'*, packing ring. The passages *1* are the condensation outlets; *2* is the vapor outlet,

and *3* is the entrance to the outlet chamber. The hermetically sealed diaphragm *e* is about half full of a liquid that boils at a temperature of 180° F., and when this is confined and subjected to a temperature of between 200° and 212°, sufficient internal pressure is created to cause the diaphragm to expand about $\frac{3}{8}$ inch in thickness. The setscrew *f* is employed to adjust the position of the diaphragm, so that the expansion must be upwards and so may be utilized to actuate the automatic valve. The opening *5* is the one through which the supply of steam from the train line enters the heating system and, after passing the unseated valve *m*, goes to the cut-out valve *u*, Fig. 2, by way of the opening *6*. After the steam makes a circuit of the radiating pipes it returns to the vapor regulator at the connection *3*.

The duty of the vapor regulator is to receive steam from the train line at whatever pressure and corresponding temperature it may be at that point, and convert the steam into vapor under atmospheric pressure at a temperature of 212° F. before passing it into the radiating pipes inside the car. By reason of the heat being radiated to warm the car, the temperature of the radiating pipes varies from about 212° F. at the point where the steam enters the inside of the car, to 208° F. or 210° F. at the point where it reaches the thermostat to pass off through the outlet of the vapor regulator in the form of condensation, this end of the system being at all times open to the atmosphere. When the temperature is about 212° F. in the diaphragm chamber, the diaphragm *e*, Fig. 3, expands and raises the operating rod *g*, which closes the automatic valve *u* through the bell-crank lever *w* and valve stem *p*; in about half a minute the temperature in the chamber around *e* will have dropped to about 200° F., and the diaphragm *e* will contract enough to allow the automatic valve *s* to unseat and adjust itself to a point where it will continue indefinitely to let just enough steam pass through to the radiating pipes to maintain a constant temperature around the diaphragm *e*.

5. Vapor Cut-Out Valve.—In Fig. 4 (*a*) is shown the cut-out valve, complete, and in (*b*) is a view of the plug valve

removed from the valve body. In Fig. 5 (*a*) and (*b*) are shown sectional views of the valve, the sections being taken on a horizontal plane through the middle of the valve to show the four chambers *a*, *b*, *c*, and *d* and the center chamber in which the plug valve shown in Fig. 4 (*b*) works. Each of the first four chambers is provided with two or more pipe connections for convenience of piping, all unused openings being fitted with plugs. The end of the valve containing the chambers *a* and *d* is called the *regulator end*, whereas the end having the chambers *b* and *c* is the *radiation end*, or the heating-coil end. When

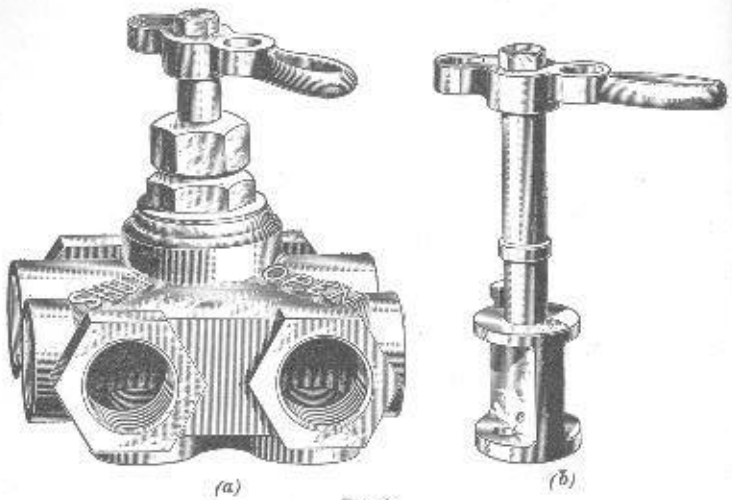

Fig. 4

the handle of the valve stands at *Open*, marked on the outside of the body of the valve, Fig. 4 (*a*), chamber *a* is connected to chamber *b*, and chamber *c* is connected to chamber *d*, as shown in Fig. 5 (*b*), so that steam from the automatic valve in the vapor regulator can pass through chambers *a* and *b* to the radiating pipes, and after completing the circuit of the car it can pass through chambers *c* and *d* to the thermostat in the vapor regulator. When the handle of the cut-out cock stands at *Shut*, Fig. 4 (*a*), the steam entering chamber *a* from the automatic valve in the vapor regulator cannot pass into the radiating pipes, but must pass to chamber *d*, Fig. 5 (*a*), and to the outlet

of the vapor regulator, thus maintaining the temperature of the regulator and preventing it from freezing up during the time steam is shut off from the heating coils. When the cut-out valve is closed, the port *x* in the body, Fig. 5 (*a*), which leads to the drip pipe *x*, Fig. 1 (*a*), and port *e* in the plug of the valve, Fig. 4 (*b*), register, and any condensation in the radiating pipes can escape to the atmosphere through the opening thus made.

6. Operation of Vapor System.—To turn steam into the radiating pipes of a car, turn the handle of the vapor cut-out valve to the position marked *Open*. In this position of the handle, steam from the train line passes through the automatic valve in the top of the vapor regulator, on into the car, through one side of the vapor cut-out valve, and into the heat-

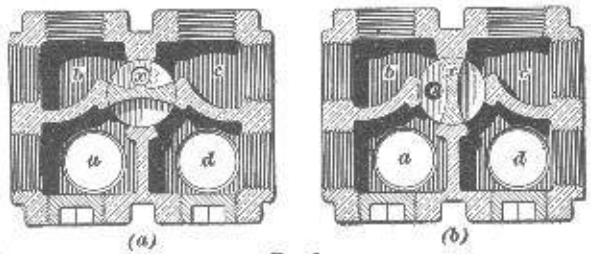

Fig. 5

ing coils. After passing through the heating coils, it returns through the other side of the vapor cut-out valve, thence down to the thermostat in the bottom of the vapor regulator and out to the atmosphere through the outlet of condensation.

The steam and hot water of condensation coming in contact with the thermostatic diaphragm cause it to expand about $\frac{3}{8}$ inch and close the automatic valve enough to permit of just sufficient steam passing the valve to maintain a temperature of about 212° F. at the thermostat. The vapor regulator thus acts as an automatic reducing valve for the heating coils by controlling the admission of steam to the heating pipes.

After steam has been turned on for a short time, in heating a cold car, the diaphragm closes the steam valve and shuts off steam completely. It then requires about half a minute for the

diaphragm to cool enough to open the steam valve a small amount and admit steam again; the diaphragm finally adjusts itself to an expansion that is just sufficient to pass enough steam into the coils to maintain a constant temperature of about 212° F. in the outlet chamber. Once the diaphragm becomes adjusted to give this result, it maintains the conditions constant as long as there is steam on the train line, regardless of what the train-line steam pressure may be.

To shut steam off from the heating coils, the handle of the vapor cut-out valve is turned to position marked *Shut*. In this position, the steam after passing the automatic admission valve flows directly through the cut-out valve without entering the heating coils, and passes direct to the thermostat. Just enough steam flows past the automatic admission valve to maintain the thermostat at about 212° F. In this position of the cut-out valve, any condensation in the heating coils can escape through the ¼-inch drip port *x*, Fig. 5 (*a*).

Cut-out valves must never be left partly open. They must either be wide open or completely closed.

7. End Train-Pipe Valve No. 105.—An end train-pipe valve that is used with this vapor system of heating, especially on vestibule cars where it is desired to operate the valve from the platform of the vestibule, together with the platform operating attachment, is shown in Fig. 6 (*a*). In the figure, *A* is the end train-pipe valve, and *B* the platform operating attachment by means of which the valve is operated from the platform. The train-pipe valve also may be operated by the handle on the valve itself under the end of the car. When the platform handle *b* is turned to the position marked *Open* on the indicator plate, the end train-pipe valve is open; when the handle stands at *Shut*, the valve is closed. It is changed from open to shut or vice versa with about a quarter turn of the handle. Turning the handle in the direction that a screw-driver is turned to tighten a screw, closes the valve. Turning the handle the reverse way opens the valve. When in either open or shut position, the train-pipe valve is locked in that position by turning the handle down as shown in Fig. 6 (*a*).

If the end train-pipe valve is operated from the ground by means of its own handle, the valve will be open when its handle points with the hose, and will be closed when the handle points crosswise of the hose.

View (*b*) is a sectional view of the end train-pipe valve showing the valve closed but the small drain port *d* open. This port allows the water of condensation in the rear end of the train line to escape. In order to open port *d* for drainage, the

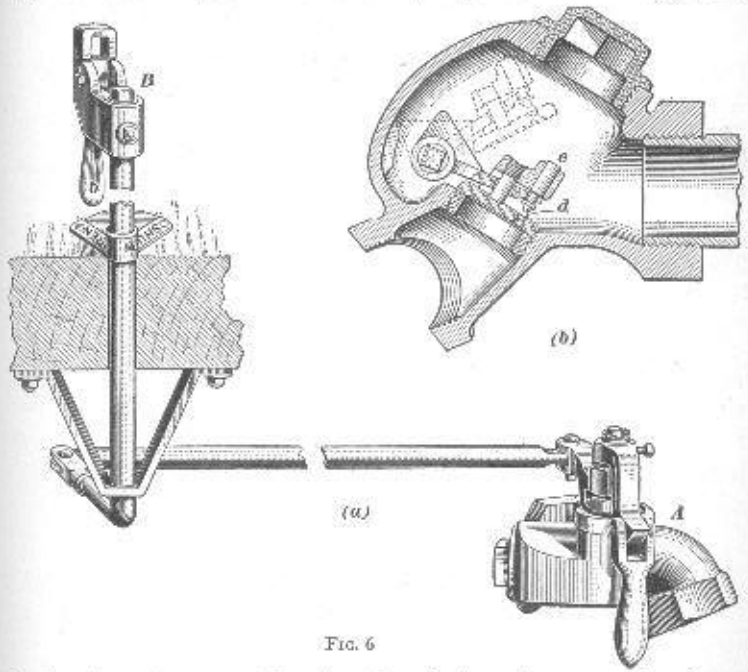

Fig. 6

train-pipe valve must be closed and then the operating lever moved slightly toward the word *Open* on the indicator plate. This will move the small bleeder valve *e* off of port *d*. This end train-pipe valve is so constructed that even when the lever is in the closed position, steam is not prevented from passing from the hose to the train line past the valve, but it is prevented from passing from the train line into the hose. On this account, if it is desired to shut off steam from the rear cars in a train, the rear train-pipe valve on the last car that is

to be left cut in must be closed. The dotted lines, in view (*b*), plainly show the position of the valve when wide open.

Fig. 7 (*a*) is a sectional view of the screw-type end train-

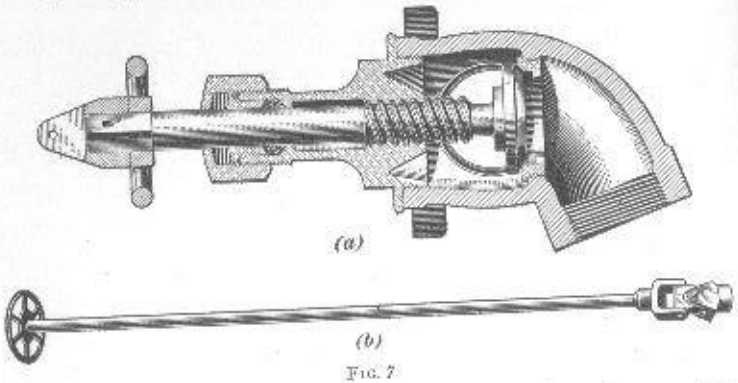

Fig. 7

pipe valve, which is operated from the ground or the car steps by means of an extension handle shown in view (*b*).

8. Steam Hose Coupler.—A view of two steam hose couplers coupled together is given in Fig. 8, and a sectional view of them is given in Fig. 9. This coupler is known as the Positive Lock Steam Coupler. In the illustrations, *b* are brass bolts, one being placed in the top of each coupler head crosswise with the gasket. The gravity trap *c* is furnished when

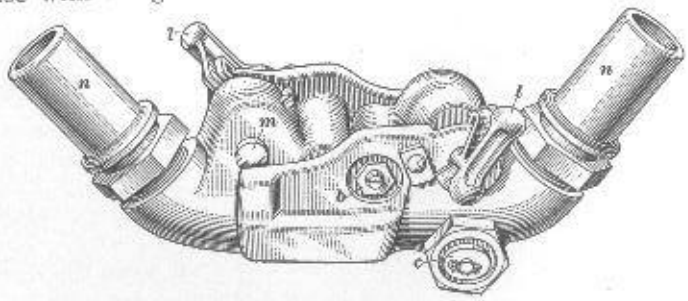

Fig. 8

specified, but is not furnished otherwise on account of the tendency to leak steam. A drainage groove *d*, Fig. 9, about $\frac{1}{8}$ inch wide is provided across the narrow projecting metal

faces at the bottom. This permits of the escape of condensation when the couplers are cold, at which time the gaskets have contracted so that their faces are slightly apart. The parts *l* are the locking bolts of the coupler-locking feature, one lock being on each coupler. The nipples *n* are made detachable so that a nipple of the proper size for the hose to be used may be furnished. Also, in case the coupler head is injured but the hose is all right, the coupler head may be changed without disturbing the hose.

9. Gasket-Protection Feature.—All styles of Nos. 302 and 303 couplers embody a feature of gasket protection by means of which injury to the faces of the gaskets from excessive butting pressure is eliminated and the life of the gasket is thereby increased. It will be seen in Fig. 9 that the iron boss on the coupler head encircles the gasket and is machined off so that it comes just flush with the face of the gasket

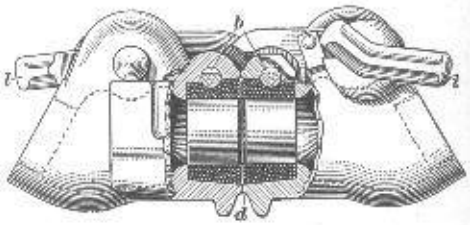

Fig. 9

when the gasket is cold. When the couplers are coupled, the two iron bosses come squarely together with the cold gaskets barely touching each other so the gaskets cannot be crushed. Also, when the gaskets are cool any water in the hose can leak past the gaskets and escape through the drainage port *d*, Fig. 9.

The gaskets are long and made slightly tapering toward the outside face. There is a rigid brass ferrule inside each gasket so that when the gaskets are heated and soften and expand they can expand only lengthwise toward each other, which causes the gaskets to press tightly together and make a tight joint. The gaskets are made long enough to insure sufficient expansion for making a tight joint.

10. Gasket-Retaining Feature.—The gasket-retaining feature of the Positive-Lock steam-heat coupler, Fig. 10, consists of a bushing *a*, a brass bolt *b*, and a brass spring *d*. The

gasket-locking arrangement can be removed from the coupler head by unscrewing the retaining bushing *a*. The bolt, view (*c*), contains a circular groove *c*, and has a brass pin *i* passing through it and projecting on each side. The gasket *f* has a groove *e*, view (*b*), cut in it, into which the bolt *b* fits when the gasket is locked in place. The bushing *a* has a groove *h* cut across the inside end so that when the bolt *b* is either in the locked or the open position the spring *d* will force the brass pin *i* into the groove *h* and lock the bolt in that position.

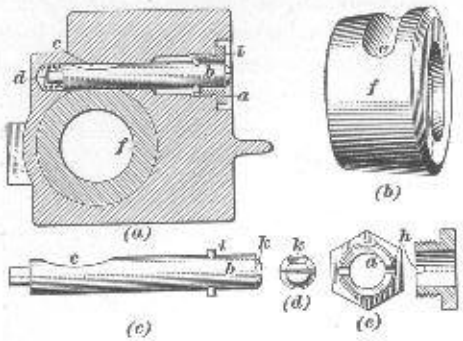

Fig. 10

When the bolt *b* is in the position shown in (*a*), with the circular groove *c* on top, the gasket is locked in place. When the bolt is turned so the groove *c* is down, the device is unlocked and the gasket can be removed. The bolt may be turned with a screwdriver, or by using a heavy knife blade, a penny, or a dime, as a screwdriver. Before the bolt can be turned, it must be pushed in against the action of the spring *d*, far enough so that the cross-pin *i* is out of the groove *h*. The bolt locks in both the open and the closed position, one-half turn locking or unlocking as the case may be. It will be noticed in view (*d*) that the end of the bolt *b* has a notch *k* on the same side as the circular groove *c*. When the notch is up, the gasket is locked in place; when it is down, the gasket is free and can be pulled out. Sometimes when the gasket is hot it is expanded so that it is too tight in the coupler head to be pulled out. However, as it cools it shrinks and when cool enough it can easily be removed.

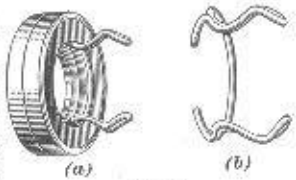

Fig. 11

The gaskets in the large size couplers are not made long enough to give sufficient expansion to permit of the gasket-protecting feature being used, so the gasket is lined with a strong brass ferrule to give it strength and to serve as a housing for a wire retaining spring, Fig. 11 (*b*). This spring slips into the coupler, view (*a*), very easily, but requires a stiff pull with a hook inserted under one of the wire prongs to remove it.

11. Coupler Locking Feature.—The high steam pressure carried in the steam-heat train line on long trains, especially where a dynamo is operated in the baggage car with steam from the locomotive, makes it desirable to have a locking device on steam-heat couplers that will insure tight steam joints. The locking arrangement used by the Chicago Car Heating Company is shown in Fig. 12. In views (*a*) and (*b*) are shown opposite sides of the locking device. View (*c*) shows the locking bolt *l* removed from the coupler head. This device is so constructed that it both locks the couplers together and takes up loose play as the couplers become warm. The locking feature consists of a taper-end malleable bolt *l* housed crosswise in the top of the coupler head, the taper end *m*, view (*b*), projecting out on top of, and wedging down on, the wing of the opposite coupler head when the lock is in use.

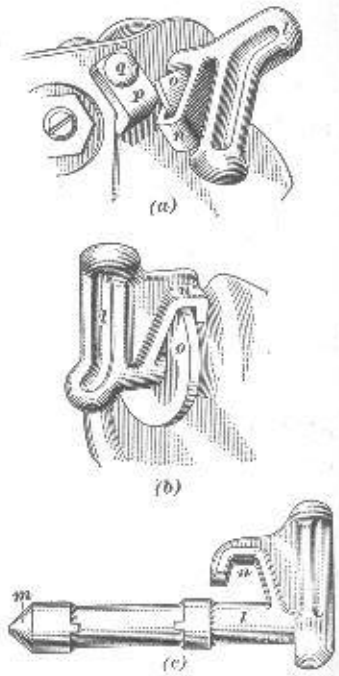

Fig. 12

The bolt *l* is made to move in and out, crosswise of the coupler head, by turning the lug or finger *n* which is cast on the handle end of the bolt. The groove of the finger *n* fits over, and is guided by, the spiral circular cam *o*, which is cast on the

side of the coupler head. Half to three-quarters of a turn of the bolt to the right causes the cam *o* to draw the tapered end of the bolt into its housing, thereby unlocking the coupling, while a like movement in the opposite direction forces the bolt out of the locking position with the opposite coupler, thereby locking the couplers together.

The part *p* is a lever stop held in place by the split rivet *q*. This stop must be removed before the locking bolt *l* can be removed from the spiral cam and the coupler head.

The spiral of the cam *o* is given a sharp pitch, and the movement imparted to the bolt by the cam, together with the effect

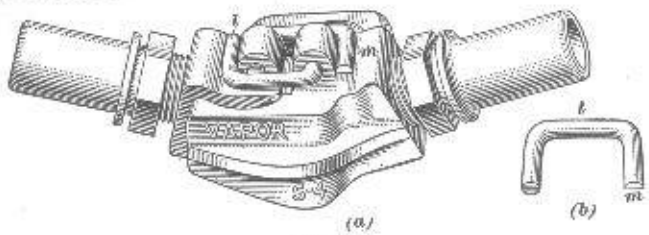

Fig. 13

of the tapered end of the bolt *l*, permits of sufficient movement of the bolt *l* to take up all loose play of the couplers.

12. A simple locking device used on an S-4 coupler is shown in Fig. 13 (*a*). It consists of a short **U**-shaped hook *l*, view (*b*), one leg of which passes through the lug on the coupler head, leaving the other end free. When two couplers are connected, the free end of each hook is thrown over the lug on the other coupler head, thus locking the two couplers firmly together. The lock should not be put in place until the coupler heads are properly connected.

MULTIPLE REGULATION SYSTEMS

13. Heating-Coil Arrangement.—In equipping a car with heating coils for the vapor heating system, it is customary to put in sufficient radiating surface to warm the car to the proper temperature in the most extreme weather. To provide a means of varying the amount of heat furnished a car, the

radiation is divided into a number of independently controlled heating coils, or units. The proper manipulation of these coils permits of any desired heat regulation being obtained to meet either outside weather conditions or inside conditions for different parts of a car.

An example of the multiple regulation system is shown in the general arrangement of the vapor-system pipes in a sleeping car. They consist of a long coil, on each side of the car, running the full length of the car, and a short separate coil for each of the rooms. Each coil is controlled by its own cut-out valve.

In severe weather the coils running the full length of the car may be used, and extra heat may be supplied to any room by opening the cut-out valve for that particular coil. In moderate weather, any room may be heated separately by turning steam on the coil for that room.

For coaches and chair cars, the coils run the full length of the car, as illustrated in Fig. 1, which shows the piping arrangement for a car where five pipes are used on each side. One vapor regulator and two cut-out valves are used with the heating coils for each side. The two cut-out valves are connected in parallel, the valve *a* on the left being connected to the outside coil, and the cut-out valve on the right to the inside coil. The right cut-out valve is specially constructed to permit of drainage when the car is left without steam in cold weather with the cut-out valve in the open position.

Some cars are provided with two two-pipe coils to a side. Each of the heating coils is independent of the others and may be operated separately, so that the car may be heated with either two, four, six, or eight pipes. Where more heating surface or closer adjustment of the heat in the car is needed, more pipes are added to the coils. Thus, each side of the car may have one coil of three pipes and one coil of two pipes, as in Fig. 1. This arrangement calls for one vapor regulator, and for two cut-out valves which are connected in parallel, for each side of the car, so that any of the coils may be used separately or in connection with any of the other coils. A much greater range of heating surface can therefore be obtained, since by

proper combinations two, three, four, five, six, seven, eight, or ten pipes may be used at a time.

The six-pipe multiple regulation system consists of two coils on a side, each coil containing three pipes. The coils are con-

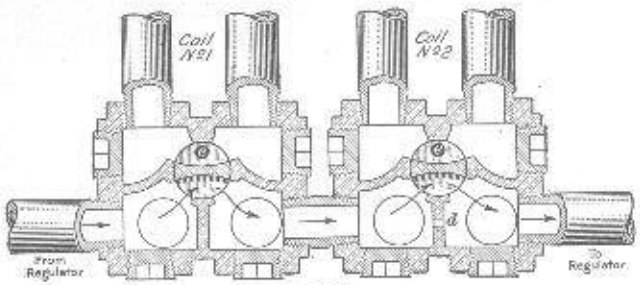

IG. 14

nected as in the previous system with the cut-out valves in parallel.

There are two methods of connecting two or more cut-out valves to a single vapor regulator, each method producing distinctly different results in the way the heat may be regulated.

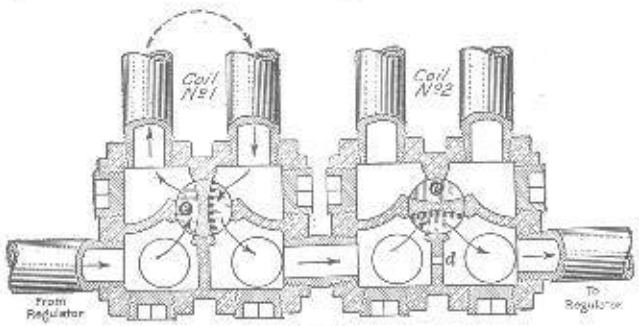

FIG. 15

The methods consist in connecting the cut-out valves in *parallel*, or in *series*.

14. Connection in Parallel.—Cut-out valves are connected in parallel when it is desired to heat several coils from the same vapor regulator and to have things so arranged that any one of the coils may be heated alone or in connection with

any one or more of the other coils. How this may be accomplished is shown in Figs. 14 to 17, inclusive. The figures

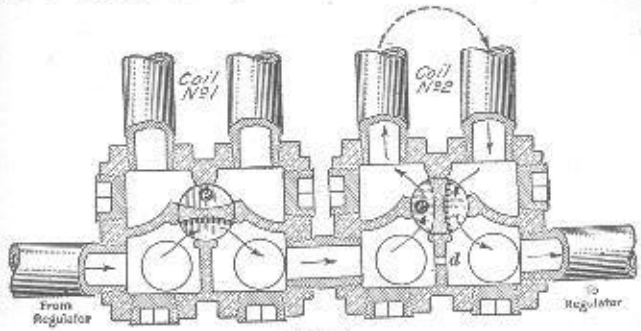

FIG. 16

show the piping arrangement for two coils that are to be operated from the same vapor regulator. The regulator is piped to the left cut-out valve, which controls the steam supply to coil No. 1. The right cut-out valve controls the steam supply to coil No. 2. It will be noted that the pipe between the two valves connects with the regulator end of each of the cut-out valves and that both heating coils connect with the outlets in the radiation end of the cut-out valves.

In Fig. 14, both valves are closed so that the steam short-circuits across both cut-out valves and does not go through either coil. In Fig. 15, the cut-out valve on the left is open so

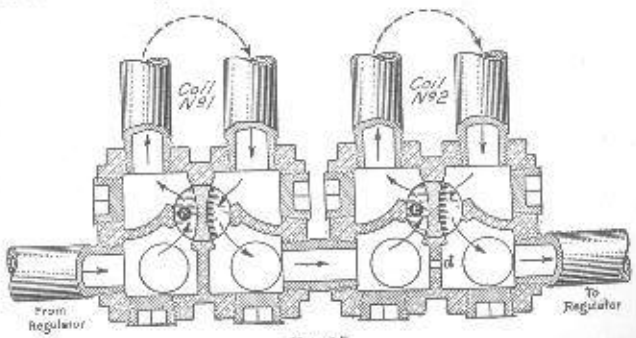

FIG. 17

that steam can feed into the heat coil No. 1, but does not heat coil No. 2. In Fig. 16, steam is cut off from coil No. 1, which is

not heated, but the steam feeds into and heats coil No. 2. In Fig. 17, steam first flows through coil No. 1 and then passes through coil No. 2, heating both coils.

15. Cut-out valves are made in No. 1 style as illustrated in Fig. 14 in connection with coil No. 1, and in No. 2 style as illustrated in Fig. 14 in connection with coil No. 2. In the No. 2 style there is, as shown, a $\frac{1}{8}$-inch drainage hole *d* in the partition on the regulator side of the valve. This drainage hole takes care of all the condensation from the return pipe of No. 1 coil and from the feedpipe of No. 2 coil, if the valves are left open when steam is cut off from the train line. The drip pipe *x* being closed, the water of condensation drains through the drainage hole *d* into the pipe leading to the regulator. The drainage hole *d* is so small, $\frac{1}{8}$ inch, that the condensation returning from coil No. 1, when steam is on, seals the opening with water.

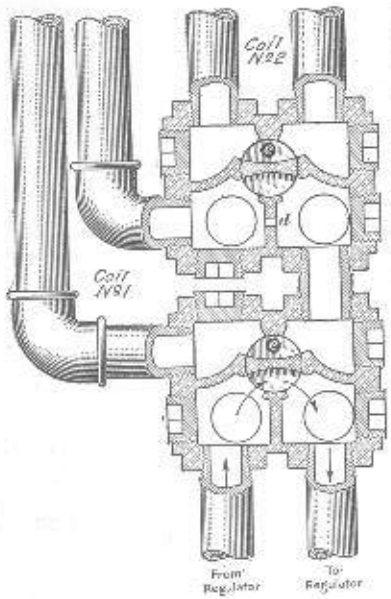

Fig. 18

When a cut-out valve is closed, any condensation in the coil will escape through the $\frac{1}{4}$-inch drip hole *e*, Fig. 14, in the bottom of the heater-coil end of the valve, since the drip hole *e* is open in the closed position of the valve.

16. Connection in Series.—Cut-out valves are connected in series when two coils are to be heated from the same regulator and it is desired to so arrange things that if only one coil is to be used, the No. 1 coil will always be that coil. Thus, in sleeping cars or business cars this arrangement insures that if steam is used on the car, the coil extending the full length

of the car must be the first heated, which insures protection to the toilet water pipes in cold weather. The No. 2 coil is fed only with the vapor that has first passed through coil No. 1. In fact, coil No. 2 when cut in acts merely as an addition to the heating-coil surface of coil No. 1.

The piping arrangement of cut-out valves in series is shown in Figs. 18, 19, and 20. Fig. 18 shows both valves closed so that neither coil is heated. The steam from the regulator merely short-circuits through the No. 1 cut-out valve. The second valve should be closed so as to open the drip hole *e*. The No. 2 cut-out valve must be a Style 2 valve so as to have the drainage hole *d*. It is to be noted that the coil No. 1 is piped from the radiation end of the valve No. 1 to the regulator end of valve No. 2, and the pipe between the valves is similarly connected

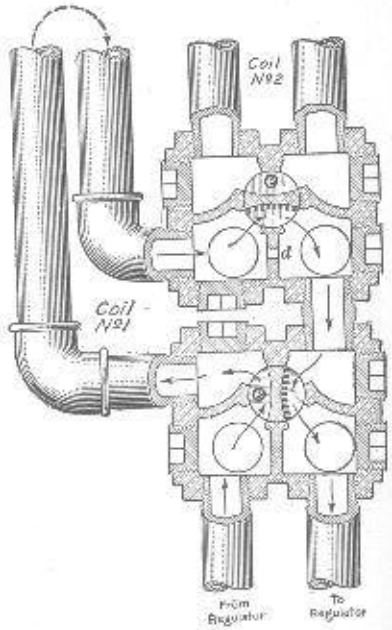

Fig. 19

Fig. 19 shows the No. 1 valve open so that No. 1 coil is heating but No. 2 coil is not. Fig. 20 shows both coils heating, the vapor from coil No. 1 having to pass through coil No. 2 before it can return to the regulator.

Two other arrangements of the pipings for connecting cut-out valves in series are shown in Figs. 21 and 22.

17. Connection in Parallel Series.—A combination parallel and series arrangement is shown in Fig. 23. The object of this arrangement is to permit of an extra coil, No. 3, being used entirely independent of coils No. 1 and No. 2. It will be noted that vapor can be turned on or off coil No. 3 by opening

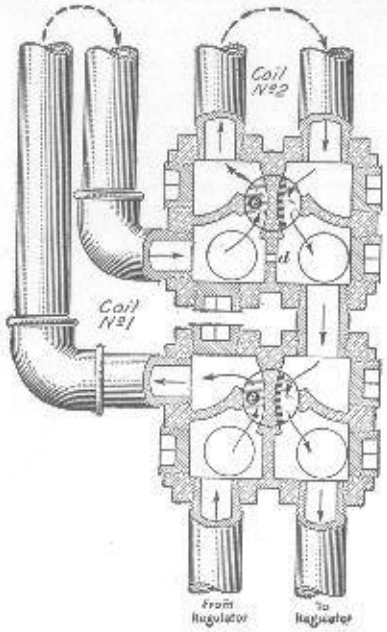

Fig. 20

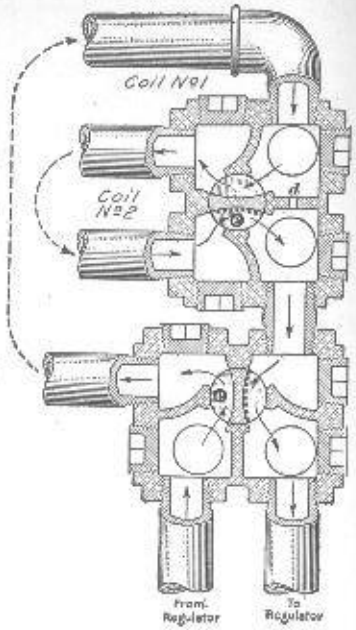

Fig. 21

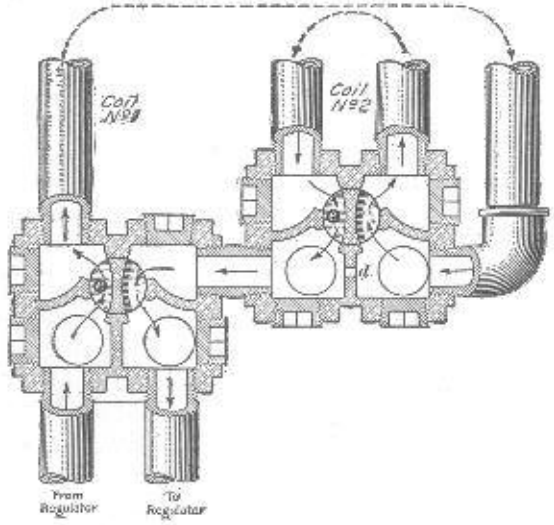

Fig. 22

or closing the No. 3 cut-out valve and without interfering in any way with the other two coils. The No. 3 coil is in parallel

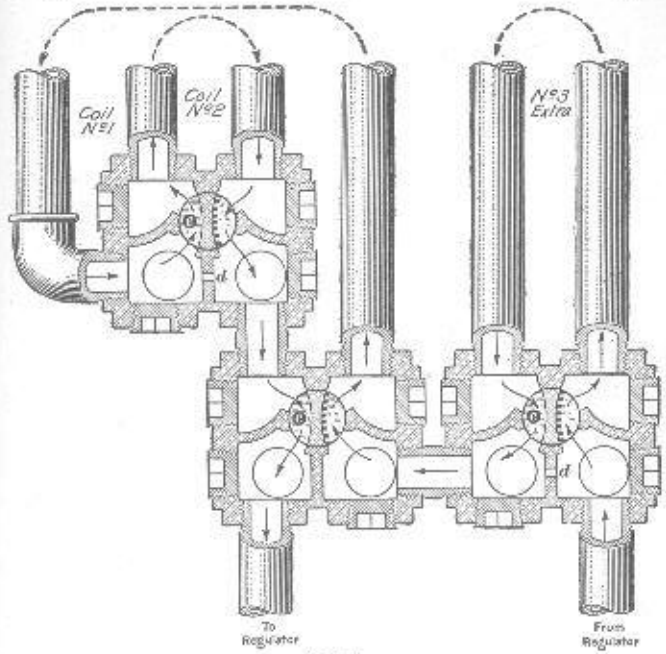

Fig. 23

with the No. 1 coil, whereas No. 2 coil is in series with No. 1 coil.

OPERATION OF VAPOR HEATING SYSTEM

18. General Instructions.—The steam-heat train line with its hose connections and branch pipes is situated underneath the cars and is exposed to the weather. Naturally a great deal of condensation results. This water follows the flow of the steam toward the rear coach, and if the end train-pipe valve is open a small amount, the water will be discharged from the system through the rear hose. If the end train-pipe valve is not open, the hose will quickly fill with water and freeze solid. Then, the condensation will gradually fill the train line from the rear, and will freeze and cause a great deal of

damage. The only way to avoid this is for the rear-end trainmen to know positively that a little steam is escaping from the rear hose coupling at all times. This is the most important rule of car heating: *Keep a little steam escaping at the rear hose at all times.* The rule second in importance is: Never cut off steam from the train without first opening the rear-end train-pipe valve wide and blowing out the train line thoroughly. The train pipe valves must all be kept open wide except the last valve, which must be opened a small amount for the escape of steam.

The effect of wind and sun should be taken into account by the trainmen in regulating the heat. With a high cold wind blowing on one side of the train, more heat should be used on that side to overcome the drafts occasioned by the wind. A steel car will be more evenly heated if more heating surface is used on the shady side than is used on the sunny side.

19. Regulation of Cut-Out Valves.—The cut-out valves are located on the floor inside the car at some point that is easy of access. They are placed between the vapor regulator and the heating coils, and so are subjected only to low, or *vapor,* pressure.

The heating pipes of a car are divided into several independent coils and each coil has its own cut-out valve. The function of each valve is to let vapor into, or to keep vapor out of, its own particular coil.

When the handle of a cut-out valve is turned to the position marked *Open,* steam is directed through the radiating pipes controlled by that valve and back to the outlet of the vapor regulator, thus heating that coil. When the handle is moved to the position marked *Shut,* steam is prevented from passing into that coil.

A cut-out valve must always be either wide open or closed tight. It must never be left partly open.

20. Regulation of End Train-Pipe Valves.—From Fig. 6 it will be seen that the No. 105 train-pipe valve can be operated either by the platform handle or by the handle on the valve itself. Also, this is true for the No. 104 valve. The open

and the shut positions are indicated for the platform handle. To operate the valve from the ground by means of the handle attached to the valve itself, turn the handle in the direction that the hands of a clock turn to close the valve, and in the reverse direction to open it. When the valve is open the handle points with the hose, and when closed the handle points crosswise of the hose. About one-quarter turn of the handle opens or closes the valve.

All train-pipe valves must be wide open when no steam is in the heating system. When steam is being used, all train-pipe valves must be open wide except the rear train-pipe valve. The rear valve must never be closed tight, but must be open enough to let all the water of condensation and some steam escape.

21. Cause of Train Line Freezing Up.—The train line of the steam-heating system extends from the engine to the rear of the train. It is connected between cars by steam couplers, and is provided with branch steam connections to the heating pipes of each car. The entire train line with its branches, etc., is exposed to the weather. Part of the steam that is traveling through the train line must give up its heat to maintain the temperature of the train line. When the steam parts with its heat, it is changed back from the form of steam into that of water, and this is the water that is spoken of as the *water of condensation* in the pipes. Now, if there were no outlet for this water it soon would fill the train line and would lose its heat and freeze solid, bursting the piping. To avoid this, provision for the escape of the condensation is made at each steam coupler, and at the end train-pipe valve, which is left partly open to insure free escape at the rear end. Both the movement of the train and the flow of the steam toward the rear of the train have a tendency to cause the water of condensation to flow to the rear, and if the end train-line valve is not open enough for the water to escape, the train line will soon freeze up and cause serious troubles.

The cardinal principle of car heating, therefore, is to keep the train line free of condensation. This leads to two fundamental rules of car heating which are: Rule 1. Always keep

a little steam escaping from the end train-pipe valve. Rule 2. Never cut steam off from the train line without first opening the rear train-pipe valve wide and blowing out the train line thoroughly.

22. Blowing Out Train Line.—To blow out the train line, open the end train-pipe valve wide until all water is blown out at the rear end and is followed by a good blow of steam. The end valve should then be closed tight, and then opened just enough so that all the condensation that is generated and a little steam will escape.

In cold weather the train line should be blown out every 30 to 50 miles, depending on the severity of the weather, by opening the rear train-pipe valve for 1 minute. When approaching a terminal or in any case when the steam supply is to be cut off at the engine, the rear train-line valve should be opened wide for from 3 to 4 minutes and full pressure blown through before the engine is cut off.

23. Coupling and Uncoupling Steam Hose.—Steam hose should be coupled together by proceeding as follows: Tip each coupler head upwards, place the lower edge of the couplers together, and as the locking lugs on the sides come together force the coupler heads down until they lock square. The locks should never be put in place until the coupler heads are properly connected.

Steam hose must never be uncoupled while steam pressure is on the train line, owing to the danger of scalding resulting from the escaping steam. If in doubt whether steam pressure is on the hose, kick the couplers up or tap them up with a hammer and if steam is on the line it will blow each time the couplers are kicked up.

Steam hose must always be uncoupled by hand by pulling or breaking the coupling straight up in the middle. After the parts are uncoupled they should be hung up on the chain in such a way that they will drain and not hold water. Couplers should never be allowed to touch the ground or to be dragged along the ground.

24. Replacing Gaskets.—The gasket found in the head of the S-4 steam coupler, Fig. 13 (*a*), has a spring that, when the gasket is in place, expands into a groove in the casting and so holds the gasket in place. The ends of the spring extend inwards into the central opening of the gasket, and must be pinched together in order to contract the spring enough so the gasket can be withdrawn readily. A small bar tool called the S-4 Gasket Remover and Lock Lifter is made as a handy means of removing gaskets and lifting the lock hook. One end has a tapered opening which allows the remover to be slipped over the spring ends. A pull on the remover causes the spring ends to be squeezed together and the gasket slips out of the coupler head. The gasket can be pushed into place without difficulty.

To remove the gasket from the Positive Lock Steam Coupler, Fig. 8, proceed as follows: By means of a screwdriver, a dime, a penny, or a heavy knife blade, push the locking bolt *b* well in until the cross-pin on the bolt is out of the groove *h*, Fig. 10, and turn the bolt half way around until the cross-pin again snaps into the groove *h*. The gasket can then be pulled out of the coupler head. If the coupler head is very hot, the gasket may be swelled until it is tight in the coupler head. However, as the coupler cools the gasket will shrink so that when the coupler head is cool enough the gasket will come out readily. In replacing the gasket, place it in the coupler head with the center of the groove *e*, Fig. 10, even with the center of the top of the coupler head. Then, press the bolt *b* in and turn it a half turn so as to lock the gasket in place.

The gasket shown in Fig. 11, used with the large-size couplers, is removed by inserting a hook under one of the wire prongs of the retaining spring and given a sharp pull. The gasket is pushed into position very readily.

25. Train-Line Steam Pressure.—The steam pressure in the train line is not the same throughout the length of the pipe. It is highest at the engine and lowest at the rear of the last car. Steam is drawn out of the train line in considerable quantities at each car for the purpose of heating that car; also,

steam is constantly being condensed in maintaining the temperature of the train line, consequently there is a continuous drop in pressure from the front of the train to the rear. The amount of this difference in pressure depends upon the temperature of the weather and the length of the train. It may vary from between 40 and 50 pounds for a six-car train in zero weather, to 100 or 120 pounds with a train of seventeen cars.

The rule is to carry sufficient steam pressure at the engine to give at least 8 pounds pressure at the rear-end steam hose. If there is a steam gauge in the rear car and it shows less than 8 pounds, or, in the absence of a gauge, if opening the rear hose does not give a good strong blow of steam, the engineer should be requested to increase the steam pressure in the train line.

Table I will act as a guide as to what pressure should be carried under different conditions of weather and train length.

TABLE I

TRAIN-LINE PRESSURE FOR HEATING CARS

Number Cars in Train	Weather 10° F. or Warmer	Weather 10° F. to −10° F.
	Pressure. Pounds	Pressure. Pounds
6	50	60
7 to 10	75	80
11 to 14	100	110
15 to 17	110	125

For trains longer than 17 cars, sufficient pressure should be furnished at the engine to give at least 8 pounds pressure at the rear steam hose. Since the conductor is responsible for the proper heating of the train, enginemen should be governed by the request of the conductor as to the steam pressure required.

The pressures given in the table also are the maximum pressures to be used in making terminal tests.

In order to insure the correct steam pressure being carried, the steam-heat gauge in the locomotive must indicate correctly.

Also, before leaving the roundhouse the engineer must know that the reducing valve and the stop-valve are in good working order, and the tender hose and gasket in good condition. Also, to insure that the steam line to the rear of the tender is free from ice, the stop-valve should be opened for a moment and a full volume of steam be allowed to blow through the tender hose.

The reducing valve on the engine is intended to regulate the steam pressure to the car-heating apparatus, and it must not be used to turn steam on and shut steam off the heating system. The stop-valve is provided for turning steam on and off the train line. Steam must not be shut off at the engine until the train line has been thoroughly blown out at the rear of the train.

26. Conductor's Responsibility.—When the signal is received that the steam hose is connected after the train has been coupled up, the fireman will turn on steam. Once on, he must not shut off the steam until about 2 minutes before reaching the point where the engine is to be disconnected from the train, except he is requested by the conductor to do so. Before giving the signal to shut off steam, the conductor must know that the rear train-pipe valve has been opened wide and the train line thoroughly blown out.

From the moment the conductor takes his train at the terminal, he is responsible for the proper heating of the train. Therefore, before giving the engineer the signal to leave the station he must satisfy himself that a complete circulation of steam has been established to the rear of the train, as will be indicated by steam escaping through the rear hose.

The conductor is the one to say what pressures shall be carried in the train line and he should keep informed of the steam-gauge reading in the rear car, which should not be allowed to drop below 8 pounds pressure. Steam must not be cut off the steam-heat system nor the steam pressure reduced except on the conductor's request.

27. Waste of Steam.—The most economical way of heating a train is to maintain the proper train-line pressure from terminal to terminal. To shut steam off from the train

line and to turn it on again several times during a trip causes a waste of steam. When steam is turned off the train line, the diaphragms in the vapor regulators become cold. If steam is then turned on again, it will blow right through the regulator to the atmosphere until the diaphragm is reheated to a temperature of about 200° F. The steam that is thus blown away causes a much larger waste of steam than would occur if the train-line pressure were maintained during the time it was shut off. Besides the steam blown to the atmosphere, enough steam must be used to reheat the train line, regulators, etc., to working temperature.

28. Steam-Heat Inspection Rules.—Terminal men and inspectors should inspect car-heating equipment in the following order: Steam couplers, end train-pipe valves, train-line piping and pipe covering, vapor regulators, cut-out valves, piping of heating coils, pipe anchors, and straps.

When the hose is hung on its chain, see that it does not hold water.

Note if the end valves are properly located, if the lever of the operating handle is the same length as the lever-operating arm of the end valve, and parallel with it.

Observe whether the train-line pipe drains to both ends of the car as it should.

See if the regulator is placed so that pipe connections, Fig. 2, between it and the train line drain into the train line; if the drip from the regulator is placed as far away as possible from the rails and the air-brake equipment; if the vapor regulators are correctly adjusted and locked.

Note whether the pipe connections *c* and *d*, Fig. 2, between the regulators and the cut-out valves drain into the regulator; whether the drip pipes *x* to the cut-out valves are enclosed in the covering of pipe *c* or pipe *d*, to prevent freezing, and whether the drip from these pipes clears the air-brake equipment.

The top pipes of the heater coils should be run parallel with the truss plank, since the camber of the car will insure their drainage. The bottom pipes of the coils must have sufficient fall to insure drainage.

See that all coils have expansion loops and that the pipes are properly secured with adjustable straps or other device to permit of expansion movements of the pipes without the hangers being dragged from position.

Note whether the radiation pipes are securely anchored so that they will not shift endwise, and whether the anchors are so placed as not to interfere with the expansion of the pipes.

29. Making Up Trains.—In making up a train and getting it ready for steam from the engine, after the cars are coupled together all steam hose should be coupled up and all train-pipe valves opened wide.

When the engine is coupled up, the train line should be thoroughly blown out and the rear train-pipe valve then adjusted so that a little steam will escape through the rear steam hose. This hose should be hung on its chain.

30. Heating Up a Cold Train.—To heat up a cold train, see that all train-pipe valves are open. When steam is first turned on, water will blow out of the rear hose until the train-line piping is all heated up, when steam will appear. After a good blow of steam through the train line, the rear train-pipe valve should be closed and then opened a little so that the condensation and a little steam will escape from the steam hose.

The steam gauge in the last car should indicate a pressure of at least 8 pounds. If it indicates less than 8 pounds, or, where there is no gauge, if opening the end train pipe does not give a good blow of steam, the engineer should be requested to increase train-line pressure the desired amount.

When the proper train-line steam pressure is obtained, open the cut-out valves inside the cars, beginning with the last car and working toward the engine.

In steam-heat systems where steam is used in connection with steam jackets on the Baker-heater pipes, the hot-water circulation can be quickened by opening the blow-off valve that is attached to the trap, to blow out the condensation, then closing it and opening it a small amount to let out the condensation and a little steam.

In dining cars, business cars, and cars of that nature, a Baker heater is sometimes used in addition to the vapor system of car heating, the Baker heater being used as an emergency heater at such times as the car is cut off from a supply of steam. Both systems may be used at the same time if the water in the Baker-heater system is not too hot. If it is very hot, then if the vapor system is started the water in the Baker system will be overheated, which will make the safety valve blow off. This will cause a loss of water out of the Baker system which may be sufficient to stop the circulation of the water in that system.

31. Regulating Car Temperature.—The temperature of the coaches of a train is regulated by the trainmen, who have also the authority to handle the end train-pipe valves which control the passage of steam from the engine to the rear of the train. On cars having a porter or special attendant, such as dining, buffet, café, parlor, sleeping, or private cars, the temperature is usually regulated by the porter or attendant. However, they have no authority to handle the end train-pipe valves, the regular trainmen being responsible for the control of these valves.

Each car equipped with the vapor heating system has two or more heating coils on a side, each coil of which can be separately heated or cooled in about 1 minute. The amount of heat given off by any coil is practically constant and cannot be changed. Therefore, to increase or decrease the temperature of a car, one or more coils are either cut in or shut off, depending on the result desired. When all the coils are cut in, the maximum heat is being supplied the car.

32. By using a little thought, trainmen can operate the multiple regulation systems so as to give the desired car temperature with a minimum use of steam and with plenty of ventilation, regardless of weather conditions.

In heating a steel car, the best results will be obtained by supplying more heat on the shady side of the car than on the sunny side.

With any type of car, where there is a high wind blowing on one side of the car, more heat should be supplied on the windward side than on the opposite side, to overcome the drafts on that side.

In mild weather where the heat from one coil is all that is necessary, the coil on the windward or the shady side of the car should be used.

33. In cars designed for special use, such as sleeping cars, compartment cars, etc., the heating system is designed with the idea of giving a positive method of regulating the temperature of the car as a whole and of the various parts of the car separately.

In a sleeping car when the passengers are all up in the morning, if the weather is cold all the heater coils should be turned on to heat the car quickly, then such coils as are unnecessary may be turned off. If the weather is not severe, either one or both of the heater coils that run the entire length of the car may be used. If extra heat is required in ladies' drawing or dressing rooms or in the men's smoking room, it can be turned on without affecting the temperature of the body of the car or without the heating of one of the rooms affecting the temperature of the others.

At night, the berths must be kept cool for sleeping by using only such radiating surface as is necessary.

34. Danger of Freezing Heater Coils.—Steam may be entirely turned off from the heating coils of a car by closing all cut-out valves within the car. There will not be the least danger of freezing, since the coils drain promptly when the steam is turned off, and the drip pipe is kept from freezing by the heat of the steam pipe with which it is enclosed by insulating covering. Whether steam is turned on or off the coils of a car, the vapor regulator is in operation and consequently is kept hot.

35. Steam-Jacket System.—In cars equipped with the steam-jacket system in connection with a Baker heater, a steam-admission valve located in the stove room regulates the amount of steam used, and consequently the temperature of the car. To raise the temperature, open the valve wider; to lower it, partly close the valve. The valve must not be entirely closed in

freezing weather, as the heating system is liable to freeze up.

When the steam-admission valve is open, steam from the train line passes through the valve into a system of steam jackets which surround certain parts of the water-circulation pipes of the Baker heating system. These jackets are situated underneath the car and they heat the water in the circulating pipes of the Baker heater, which causes the water to circulate through the heating pipes. The steam does not come in actual contact with the water. The condensation from the steam jackets passes off through a steam trap underneath the car. Both fire and steam may be used in very severe weather if necessary, without injury to the Baker heating equipment.

36. Hose Leakage.—Sometimes on account of a special drawbar-centering device being used, the end train-pipe valve is placed a small distance away from the position where it should be. This may be sufficient to cause the steam hose and air hose to interfere enough to cause the house-coupler gaskets to become unseated when rounding curves, and therefore to leak steam.

37. Burst Hose.—If a steam hose bursts during cold weather, the train must be stopped at once and a new hose applied, otherwise serious trouble may result from the freezing up of the train.

Extra steam hose should be carried on the engine and in the baggage and sleeping cars for emergencies of this kind. If one should not be at hand, the steam hose from the rear of the last car may be used. In that case, the removed hose should be replaced at the first point where steam hose is available.

38. To Cut a Car Out.—Where a car is to be cut out en route during cold weather, open the rear-end train-pipe valve wide and leave it open. When the train line of the car to be cut out is properly blown out, close the rear train-pipe valve of the car ahead of the one to be cut out. All steam in the train line back of this point will at once discharge to the atmosphere and the steam-hose coupling can be safely cut and the car set out. If there is danger of the water system in the car freezing up, the car should be put on an auxiliary source

of steam heat if one is at hand, or its emergency heating system should be started if it has one. If there are no means of heating the car, then it should be drained of all water that is in the water system, by blowing the pipes out with air if possible. After the train is connected again and the hose coupled up, the end train-pipe valve on the car ahead should be opened wide, allowing the steam to blow back and discharge through the rear steam hose. When a good strong blow of steam is obtained, the rear train-pipe valve should be closed and then opened enough for it to "bleed" a little steam.

39. Changing Engines.—When approaching a terminal where the engine is to be changed, or detached from the train, or in any case where steam is to be cut off from the train line for more than 15 minutes by closing the stop-valve in the cab, the rear train-pipe valve must be opened wide for about 2 to 3 minutes before the engineer shuts off steam. This will blow the train line clear of all condensation so that when the stop-valve is closed the train line will quickly lose all steam and moisture.

If the steam pressure should fail before the train line has been blown out, then all steam couplers should be uncoupled and hung up on their chains to drain.

When an engine is disconnected from a train during cold weather, the stop-valve in the cab should be "cracked," or slightly open, so that enough steam will discharge through the tender steam hose to keep the hose from freezing up.

40. Cold-Weather Precautions.—The conductor should not forget that he is the one who is held responsible for the heating of the train, and he should see that the train crew are alert and watchful during severe cold weather. The engineer, too, should take extra precautions.

The engineer should keep the stop-valve "cracked" and should blow out the engine train line before coupling to the train. He should not shut steam off the train line when running, because the train line will freeze up and necessitate delay in thawing it out. He should not shut steam off until the train line has been thoroughly blown out. Also, he should not cut

his engine from the train until he knows that there is another engine equipped with steam heat ready to couple on.

The conductor should not permit the train to leave the terminal until steam is escaping from the end hose, and the steam-heat gauge in the last car indicates a pressure of at least 8 pounds.

He should instruct his trainmen to see that a little steam is continuously escaping from the rear hose throughout the trip. If it is not escaping, then the train-pipe valve should be opened and the train line blown out. The train line should be blown out for a minute or two every 30 to 50 miles, depending on the severity of the weather. When approaching a terminal or any point where the steam is to be shut off from the train line, the rear train-pipe valve should be opened wide for 2 or 3 minutes before the signal is given to shut steam off from the train line. In case steam should fail before the train line is blown out, all couplers should be uncoupled and hung on their chains to drain.

In case of accident where the train would be without heat for a length of time sufficient for the toilet water pipes, etc., to freeze, it will be necessary to drain the system and blow it out with air pressure.

REPAIR AND ADJUSTMENT OF REGULATOR

41. Repair and Adjustment Methods.—In the following description of the methods of repair and adjustment of the regulator, the parts referred to are identified by the letters as shown in Fig. 3.

To Clean Strainer.—Once a year, at the opening of the heating season, the cap *b* of the vapor regulator should be unscrewed, the disk holder removed, and any dust or scale that has accumulated around the strainer should be cleaned out.

To Remove Disk n.—The automatic valve of the vapor regulator works against the disk *n* to insure the valve seating accurately. To remove the disk, unscrew cap *b* and the disk holder *r*, and the disk *n* will be removed with the disk holder.

To Remove the Automatic Valve s.—To remove the valve *s*, take out the bolt *y* and remove the shield *c* which protects the

bell-crank lever *w* and the valve stem from injury. Take out the upper pin *i* and the fulcrum pin *x*, swing the bell-crank *w* on the lower lever pin *i* until it is out of the way, unscrew the bonnet *q*, and lift out the stuffingbox and valve stem.

To Repack the Valve Stem.—It is very important that the valve stem be properly packed, and to avoid its being packed by improper parties, the stuffingbox is placed inside the regulator.

The packing rings used in the stuffingbox *o* must be made of the proper composition and of exactly the right size to permit of the bonnet *q* being screwed into its shoulder without giving too much friction on the valve stem *p*. If this friction is too great, the valve will operate hard so the regulator will blow too much steam before closing the valve.

This stuffingbox does not need to make an absolutely tight joint, because while the regulator is working normally the steam pressure to which the stuffingbox is subjected is practically atmospheric pressure. If a little steam or water leaks past the packing before the automatic valve closes, it will pass off under the shield and will do no harm, and the leak will cease as soon as the valve closes. If an excessive amount of leakage occurs the stem should be repacked.

To repack the stem, replace all the old packing with new packing of the proper composition and of exactly the right thickness to allow the stuffingbox to rest tight against the bonnet *q*, thus locking the packing in a fixed position and giving just the right pressure to make the stem steam-tight without undue friction on the valve stem.

If the valve stem is properly packed, the weight of the operating rod *g* will open the valve slowly against the friction of the packing. If the part of the stem that works through the packing is not perfectly smooth, it should be polished until it is smooth.

To Test if Regulator is Put Together Properly.—To determine whether the parts of the regulator are put together properly, set the setscrew *f* up tight against the locknut *u*. With the operating rod *g* down tight on the diaphragm *e*, measure the distance that some point on the valve steam *p* projects out past the bonnet *q*. Next, raise the operating rod until the valve *s*

is firmly seated on the disk *n*, and again measure the distance the point on the valve stem projects. The difference in the two measurements gives the travel of the valve when the setscrew is set up tight. This travel should be about $\frac{1}{16}$ inch if the regulator is properly put together.

Setting the screw *f* up tight *is not the correct way to adjust the regulator for use*. When properly adjusted the setscrew lacks about $\frac{1}{8}$ inch of being set up tight against the locknut *u*.

To Adjust the Regulator.—To adjust the regulator, there should be about 50 pounds pressure in the train line. Slack off on the setscrew *f* until steam blows through the regulator. After the diaphragm is thoroughly heated, screw up the setscrew, a small amount at a time, just enough to finally stop the steam from blowing through the regulator. The setscrew should be set up a small amount and then enough time allowed for the extra steam in the pipes to blow out before the screw is again set up a small amount. It must be remembered that the valve which is being adjusted is an inlet valve allowing steam to blow into the heating coils. Consequently, even when the screw is finally set up tight enough to close the valve, steam will continue to blow for a few seconds until the extra steam in the coils has blown out. For that reason, every time the setscrew is set up a small amount an interval of several seconds should be allowed the steam to escape so as to make sure whether the valve *s* has been closed.

After the setscrew has finally been adjusted, wait several minutes and then slack off on the setscrew a very little at a time and as much as it will stand without blowing. This gives a close adjustment, which is necessary for the best operation of the regulator.

The diaphragm and adjusting mechanism of the vapor regulator are the same as are employed with the steam trap used with the combination steam and hot-water systems on Pullman cars, and with the vertical steam trap used with the pressure system, so they all are adjusted by the same method.

The length of the setscrew must never be changed. Also, never put anything between the setscrew and the diaphragm, which has the effect of lengthening the setscrew.